Eaton Fuller FS-5406A Transmission Service Manual

This is the Eaton Fuller FS-5406A Transmission Service Manual brought to you by Pro Gear and Transmission to assist you identifying the the service repair procedures for your Eaton Fuller transmission unit.

If you need any assistance identifying the correct Eaton/Fuller unit for your truck and equipment, contact your Eaton replacement part specialists at Pro Gear and Transmission.

Pro Gear stocks every part for your Eaton transmission including: Valve Assemblies, Synchronizers, Yoke Assemblies, O-Ring Kits, Drive Gears, Gaskets, Bearing and Seal Kits, and much more.

Pro Gear and Transmission has same day shipping and thousands of products in stock and ready to ship internationally for your next project.

For parts or service contact the Eaton transmission specialists at Pro Gear & Transmission, Inc.

CALL US

EMAIL US

VISIT MODEL PAGE

VISIT ONLINE STORE

NEED THESE PARTS? 226 Eaton Fuller FS-5406A parts, priced online >> **Call 877-776-4600**

Service Manual

Fuller Mid-Range Transmissions TRSM0110

July 2011

FS-5205A
FS-5205B
FS-5205C
FS-5306A
FS-5406A
FS-5406N
FS-6205A
FS-6205B
FS-6305A
FS-6305B
FS-6306A
FS-6406A
FS-6406N
FSB-5406B
FSO-4305
FSO-6406A
FSO-8406A

Powering Business Worldwide

BACKED BY Roadranger SUPPORT

Pro Gear and Transmission, Inc | www.progearandtransmission.com | www.pgttruckparts.com
906 West Gore St, Orlando, Fl, 32805 | +1 (877)-776-4600 | +1 (407)-872191 | parts@eprogear.com

Warnings and Precautions

WARNING

Before starting a vehicle always be seated in the driver's seat, place the transmission in neutral, set the parking brakes and disengage the clutch.

Before working on a vehicle place the transmission in neutral, set the parking brakes and block the wheels.

Before towing the vehicle place the transmission in neutral, and lift the rear wheels off the ground, remove the axle shafts, or disconnect the driveline to avoid damage to the transmission during towing.

The description and specifications contained in this service publication are current at the time of printing.

Eaton Corporation reserves the right to discontinue or modify its models and/or procedures and to change specifications at any time without notice.

Any reference to brand name in this publication is made as an example of the types of tools and materials recommended for use and should not be considered an endorsement. Equivalents may be used.

This symbol is used throughout this manual to call attention to procedures where carelessness or failure to follow specific instructions may result in personal injury and/or component damage.

Departure from the instructions, choice of tools, materials and recommended parts mentioned in this publication may jeopardize the personal safety of the service technician or vehicle operator.

Warning: Failure to follow indicated procedures creates a high risk of personal injury to the servicing technician.

Caution: Failure to follow indicated procedures may cause component damage or malfunction.

Note: Additional service information not covered in the service procedures.

Tip: Helpful removal and installation procedures to aid in the service of this unit.

Always use genuine Eaton replacement parts.

NEED THESE PARTS? 226 Eaton Fuller FS-5406A parts, priced online >> Call 877-776-4600

Pro Gear and Transmission, Inc | www.progearandtransmission.com | www.pgttruckparts.com
906 West Gore St, Orlando, Fl, 32805 | +1 (877)-776-4600 | +1 (407)-872191 | parts@eprogear.com

NEED THESE PARTS? 226 Eaton Fuller FS-5406A parts, priced online >> Call 877-776-4600

Table of Contents

Introduction

Purpose and Scope of Manual 1
How to use this Manual..... 1
Disassemble Precautions 1
Inspection Precautions..... 2
Assembly Precautions..... 3

Model Information

Serial Tag Information and Model Nomenclature 5
Model Number 6
Serial Number 6
Bill of Material or Customer Number..... 6

Specifications

Torque Ratings 7

Lubrication Information

Lubrication 9
Maintain Proper Oil Level 9
Maintenance Interval Chart 10
Required Lubricant Chart 11
Transmission Operating Angles 11

Tool Information

Recommended Tools 13
Special Tools Manufacturers..... 13

Preventive Maintenance

Preventive Maintenance 15
Checks Before Transmission Removal 15
Checks With Drive Line Dropped..... 16
Checks With Universal Joint Companion Flange
or Yoke Removed 16
Inspection 17
Rear Seal Maintenance..... 17

Power Flow

Power Flow 19

In-Vehicle Service Procedures

Shift Bar Housing

How to Remove the Gear Shift Lever 23
How to Install the Gear Shift Lever 24
How to Remove the Shift Bar Housing 25
How to Install the Shift Bar Housing 26

Output Yoke

How to Remove the Output
Yoke/Companion Flange 27
How to Install the Output
Yoke/Companion Flange 28

Clutch Housing

How to Remove the Clutch Housing 29
How to Install the Clutch Housing 30

Transmission Overhaul Procedures-Bench Service

Shift Bar Housing

Functions of a Shift Bar Housing 31
How to Disassemble the Gear Shift Lever 32
How to Assemble the Gear Shift Lever 33
How to Disassemble the FS-4205
Shift Bar Housing 34
How to Assemble the FS-4205
Shift Bar Housing 35
How to Disassemble the FS-5205
Shift Bar Housing 37
How to Assemble the FS-5205
Shift Bar Housing 39
How to Disassemble the FS-6205/6305
Shift Bar Housing 41
How to Assemble the FS-6205/6305
Shift Bar Housing 42
How to Disassemble the FS-5306/6306/5406/6406
Shift Bar Housing 44
How to Assemble the FS-5306/6306/5406/6406
Shift Bar Housing 46
How to Disassemble the FSO-6406/8406
Shift Bar Housing 48
How to Assemble the FSO-6406/8406
Shift Bar Housing 50
How to Disassemble the Reverse Plunger
on FS-4X05/5X05 52
How to Assemble the Reverse Plunger
on FS-4X05/5X05 53
How to Disassemble the Reverse Plunger
For All Models Except FS-4205/5205 54
How to Assemble the Reverse Plunger
For All Models Except FS-4205/5205 55

Pro Gear and Transmission, Inc | www.progearandtransmission.com | www.pgttruckparts.com
906 West Gore St, Orlando, Fl, 32805 | +1 (877)-776-4600 | +1 (407)-872191 | parts@eprogear.com

NEED THESE PARTS? 226 Eaton Fuller FS-5406A parts, priced online >> Call 877-776-4600

Table of Contents

Disassemble Main Section

How to Remove the Input Shaft Assembly 57
How to Remove the Mainshaft Assembly 58
How to Remove the Countershaft Assembly 59
How to Remove the Reverse Idler Gear Assembly For All Models Except FS-5306/6306 60
How to Remove the FS-5306/6306 Reverse Idler Gear Assembly 61

Mainshaft Assembly

How to Disassemble the FS-4205 Mainshaft Assembly 63
How to Assemble the FS-4205 Mainshaft Assembly 65
How to Disassemble the FS-5205 Mainshaft Assembly 67
How to Assemble the FS-5205 Mainshaft Assembly 69
How to Disassemble the FS-6205 Mainshaft Assembly 71
How to Assemble the FS-6205 Mainshaft Assembly 73
How to Disassemble the FS-6305 Mainshaft Assembly 75
How to Assemble the FS-6305 Mainshaft Assembly 77
How to Disassemble the FS-5306/6306 Mainshaft Assembly 79
How to Assemble the FS-5306/6306 Mainshaft Assembly 81
How to Disassemble the FS-5406/6406 and FSO-6406 Mainshaft Assembly 84
How to Assemble the FS-5406/6406 and FSO-6406 Mainshaft Assembly 86
How to Disassemble the FSO-8406 Mainshaft Assembly 89
How to Assemble the FSO-8406 Mainshaft Assembly 91

Countershaft Assembly

How to Disassemble the FS-4X05 Countershaft Assembly 95
How to Assemble the FS-4X05 Countershaft Assembly 97
How to Disassemble the FS-5X05 Countershaft Assembly 99
How to Assemble the FS-5X05 Countershaft Assembly 100
How to Disassemble the FS-6X05 Countershaft Assembly 101
How to Assemble the FS-6X05 Countershaft Assembly 103
How to Disassemble the FS-5306/6306/5406/6406 and FSO-6406/8406 Countershaft Assembly 105
How to Assemble the FS-5306/6306/5406/6406 and FSO-6406/8406 Countershaft Assembly 107

Disassemble Main Section

How to Install the Reverse Idler Gear Assembly For All Models Except FS-5306/6306 109
How to Install the FS-5306/6306 Reverse Idler Gear Assembly 110
How to Install the Countershaft Assembly 111
How to Install the Mainshaft Assembly 113
How to Install the Input Shaft Assembly 115
Setting End Play Procedure For All Models Except FS-5205 117
Setting End Play Procedure For FS-5205 119

Purpose and Scope of Manual

This manual is designed to provide detailed information necessary to service and repair the Eaton® Fuller® transmissions listed on the front.

How to use this Manual

The service procedures have been divided into two sections: In-Vehicle Service Procedures and Transmission Overhaul Procedures—Bench Service. In-Vehicle Service Procedures contain procedures that can be performed while the transmission is still installed in the vehicle. Transmission Overhaul Procedures contain procedures that are performed after the transmission has been removed from the vehicle.

The procedure sections are laid out with a general heading at the top outside edge of each page followed by more specific headings and the procedures. To find the information you need in these sections, first go to the section that contains the procedure you need. Then look at the heading at the top and outside edge of each page until you find the one that contains the procedure you need.

Transmission Overhaul Procedures follow the general steps for complete disassembly and then assembly of the transmission.

Note: In some instances the transmission appearance may be different from the illustrations, but the procedure is the same.

Disassemble Precautions

It is assumed in the detailed assembly instructions that the lubricant has been drained from the transmission, the necessary linkage and vehicle air lines disconnected and the transmission has been removed from vehicle chassis. Removal of the gear shift lever housing assembly (or remote control assembly) is included in the detailed instructions (How to Remove the Gear Shift Lever). This assembly MUST be detached from the shift bar housing before the transmission can be removed.

Follow closely each procedure in the detailed instructions, make use of the text, illustrations, and photographs provided.

Assemblies
When disassembling the various assemblies, such as the mainshaft, countershafts, and shift bar housing, lay all parts on a clean bench in the same sequence as removed. This procedure will simplify assembly and reduce the possibility of losing parts.

Bearings
Carefully wash and lubricate all usable bearings as removed and protectively wrap until ready for use. Remove bearings planned to be reused with pullers designed for this purpose.

Cleanliness
Provide a clean place to work. It is important that no dirt or foreign material enters the unit during repairs. Dirt is an abrasive and can damage bearings. It is always a good practice to clean the outside of the unit before starting the planned disassembly.

Input Shaft
The input shaft can be removed from the transmission without removing the countershafts, or mainshaft. Special procedures are required and provided in this manual.

Snap Rings
Remove snap rings with pliers designed for this purpose. Snap rings removed in this manner can be reused, if they are not sprung or loose.

When Using Tools to Move Parts
Always apply force to shafts, housings, etc., with restraint. Movement of some parts is restricted. Never apply force to driven parts after they stop solidly. The use of soft hammers, soft bars, and mauls for all disassembly work is recommended.

NEED THESE PARTS? 226 Eaton Fuller FS-5406A parts, priced online >> Call 877-776-4600

Pro Gear and Transmission, Inc | www.progearandtransmission.com | www.pgttruckparts.com
906 West Gore St, Orlando, Fl, 32805 | +1 (877)-776-4600 | +1 (407)-872191 | parts@eprogear.com

Inspection Precautions

Before assembling the transmission, check each part carefully for abnormal or excessive wear and damage to determine reuse or replacement. When replacement is necessary, use only genuine Eaton® Fuller® Transmission parts to assure continued performance and extended life from your unit.

Since the cost of a new part is generally a small fraction of the total cost of downtime and labor, avoid reusing a questionable part which could lead to additional repairs and expense soon after assembly. To aid in determining the reuse or replacement of any transmission part, consideration should also be given to the unit's history, mileage, application, etc.

Recommended inspection procedures are provided in the following checklist.

Bearings

- Wash all bearings in clean solvent. Check balls, rollers, and raceways for pitting, discoloration, and spalled areas. Replace bearings that are pitted, discolored, spalled, or damaged during disassembly.
- Lubricate bearings that are not pitted, discolored, or spalled and check for axial and radial clearances.
- Replace bearings with excessive clearances.
- Check bearing fit. Bearing inner races should be tight to shaft; outer races slightly tight to slightly loose in case bore. If the bearing spins freely in the bore the case should be replaced.

Bearing Covers

- Check covers for wear from thrust of adjacent bearing. Replace covers damaged from thrust of bearing outer race.
- Check cover bores for wear. Replace those worn or oversized.

Clutch Release Parts

- Check clutch release parts. Replace yokes worn at cam surfaces and bearing carrier worn at contact pads.
- Check pedal shafts. Replace those worn at bushing surfaces.

Gears

- Check gear teeth for frosting and pitting. Frosting of gear teeth faces presents no threat of transmission failure. Often in continued operation of the unit, frosted gears "heal" and do not progress to the pitting stage. In most cases, gears with light to moderate pitted teeth have considerable gear life remaining and can be reused, but gears in the advanced stage of pitting should be replaced.
- Check for gears with clutching teeth abnormally worn, tapered, or reduced in length from clashing during shifting. Replace gears found in any of these conditions.
- Check axial clearance of gears.

Gear Shift Lever Housing Assembly

- Check spring tension on shift lever. Replace tension spring if lever moves too freely.
- If housing is disassembled, check gear shift lever bottom end and shift finger assembly for wear. Replace both gears if excessively worn.

Gray Iron Parts

- Check all gray iron parts for cracks and breaks. Replace parts found to be damaged.

Oil Return Threads and Seals

- Check oil return threads on the input shaft. If return action of threads has been destroyed, replace the input shaft.
- Check oil seal in rear bearing cover. If sealing action of lip has been destroyed, replace seal.

O-Rings

- Check all O-rings for cracks or distortion. Replace if worn.

Reverse Idler Gear Assemblies

- Check for excessive wear from action of roller bearings.

NEED THESE PARTS? 226 Eaton Fuller FS-5406A parts, priced online >> Call 877-776-4600

Pro Gear and Transmission, Inc | www.progearandtransmission.com | www.pgttruckparts.com
906 West Gore St, Orlando, Fl, 32805 | +1 (877)-776-4600 | +1 (407)-872191 | parts@eprogear.com

Shift Bar Housing Assembly

- Check for wear on shift yokes and blocks at pads and lever slot. Replace excessively worn parts.
- Check yokes for correct alignment. Replace sprung yokes.
- Check lockscrews in yoke and blocks. Tighten and rewire those found loose.
- If housing has been disassembled, check neutral notches of shift bars for wear from interlock balls.

Sliding Clutches

- Check all shift yokes and yoke slots in sliding clutches for extreme wear or discoloration from heat.
- Check engaging teeth of sliding clutches for partial engagement pattern.

Splines

- Check splines on all shafts for abnormal wear. If sliding clutch gears, companion flange, or clutch hub has wear marks in the spline sides, replace the specific shaft effected.

Synchronizer Assembly

- Check synchronizer for burrs, uneven and excessive wear at contact surface, and metal particles.
- Check blocker pins for excessive wear or looseness.
- Check synchronizer contact surfaces on the synchronizer cups for wear.

Washers

- Check surfaces of all washers. Washers scored or reduced in thickness should be replaced.

Assembly Precautions

Make sure that case interiors and housings are clean. It is important that dirt and other foreign materials are kept out of the transmission during assembly. Dirt is an abrasive and can damage polished surfaces of bearings and washers. Use certain precautions, as listed below, during assembly.

Bearings

- Use a flange-end bearing driver for bearing installation. These special drivers apply equal force to both bearing races, preventing damage to balls/rollers and races while maintaining correct bearing alignment with bore and shaft. Avoid using a tubular or sleeve-type driver, whenever possible, as force is applied to only one of the bearing races.

Capscrews

- To prevent oil leakage and loosening, use Eaton/Fuller sealant #71225 on all capscrews.

Gaskets

- Use new gaskets throughout the transmission as it is being rebuilt. Make sure all gaskets are installed. An omission of any gasket can result in oil leakage or misalignment of bearing covers.

Initial Lubrication

- Coat all limit washers and shaft splines with Lubricant during assembly to prevent scoring and galling of such parts.

O-Rings

- Lubricate all O-rings with silicon lubricant.

Shims

- Apply a light coat of Eaton/Fuller sealant #71233 to both sides of shims

Universal Joint Companion Flange or Yoke

- Pull the companion flange or yoke tightly into place with the output shaft nut. Make sure the speedometer drive gear or a replacement spacer of the same width has been installed. Failure to pull the companion flange or yoke tightly into place can result in damage to the mainshaft rear bearing.

IMPORTANT: See the appropriate Illustrated Parts Lists (specified by model series) to ensure that proper parts are used during assembly of the transmission.

NEED THESE PARTS? 226 Eaton Fuller FS-5406A parts, priced online >> Call 877-776-4600

Pro Gear and Transmission, Inc | www.progearandtransmission.com | www.pgttruckparts.com
906 West Gore St, Orlando, Fl, 32805 | +1 (877)-776-4600 | +1 (407)-872191 | parts@eprogear.com

NEED THESE PARTS? 226 Eaton Fuller FS-5406A parts, priced online >> Call 877-776-4600

Pro Gear and Transmission, Inc | www.progearandtransmission.com | www.pgttruckparts.com
906 West Gore St, Orlando, Fl, 32805 | +1 (877)-776-4600 | +1 (407)-872191 | parts@eprogear.com

Serial Tag Information and Model Nomenclature

Transmission model designation and other transmission identification information are stamped on the transmission tag. To identify the transmission model designation and serial number, locate the tag on the transmission and then locate the numbers as shown.

When calling for service assistance or parts, have the model and serial numbers handy.

Do not remove or destroy the transmission identification tag.

Transmission Tag and Location

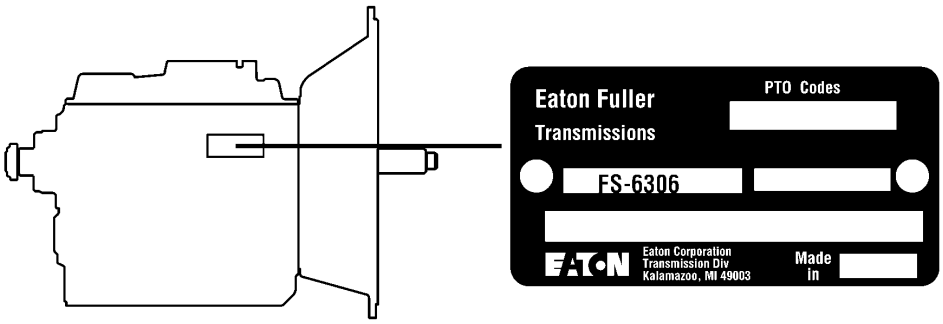

NEED THESE PARTS? 226 Eaton Fuller FS-5406A parts, priced online >> Call 877-776-4600

Pro Gear and Transmission, Inc | www.progearandtransmission.com | www.pgttruckparts.com
906 West Gore St, Orlando, Fl, 32805 | +1 (877)-776-4600 | +1 (407)-872191 | parts@eprogear.com

Model Number

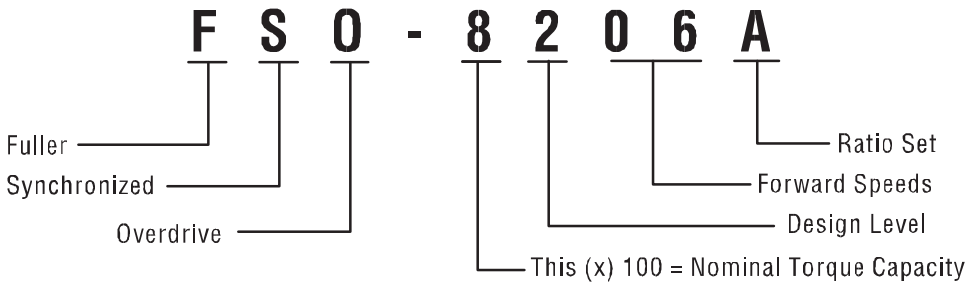

The model number gives basic information about the transmission and is explained below. Use this number when calling for service assistance or replacement parts.

Serial Number

The serial number is the sequential identification number of the transmission. Before calling for service assistance, write the number down. It may be needed.

Bill of Material or Customer Number

This number is also referred to as the "TA#" and is located below the model and serial numbers. It is a reference number used by Eaton® and is helpful if calling for technical support.

NEED THESE PARTS? 226 Eaton Fuller FS-5406A parts, priced online >> Call 877-776-4600

Pro Gear and Transmission, Inc | www.progearandtransmission.com | www.pgttruckparts.com
906 West Gore St, Orlando, Fl, 32805 | +1 (877)-776-4600 | +1 (407)-872191 | parts@eprogear.com

Torque Ratings

Correct torque application is extremely important to assure long transmission life and dependable performance. Over-tightening or under-tightening can result in a loose installation and, in many instances, eventually cause damage to transmission gears, shafts or bearings. Use of a thread sealer/locking compound is recommended for all capscrews. Do not torque capscrews dry.

TORQUE CHART

Description	Torque Value lbs. ft.	Thread Size	Additional Comments
6 Front Bearing Cover Capscrews	15-20 lbs. ft.	5/16-18	Apply Loctite 262 to threads.
4 Shift Lever Housing Capscrews	20-25 lbs. ft.	3/8-16	Apply Loctite 262 to threads.
4 Shift Lever Housing Capscrews for FSO-8406	30-40 lbs. ft.	3/8-16	Apply Loctite 262 to threads.
9 Shift Rail Retainer Capscrews	20-25 lbs. ft.	3/8-16	Apply Loctite 262 to threads.
17 Shift Bar Housing Capscrews	35-40 lbs. ft.	3/8-16	Apply Loctite 262 to threads.
1 Output Shaft Nut, Part Number 21937	300-350 lbs. ft.	1 1/4-18	With nylon locking insert. Oiled at vehicle installation.
1 Output Shaft Nut, Part Number 4304690	500 lbs. ft. +/- 25	1 1/4-18	With nylon locking insert. Oiled at vehicle installation.
4 Clutch Housing Nuts	145-155 lbs. ft.	5/8-16	Apply Loctite 262 to threads.
4 Clutch Housing Nuts for FS-4205	123-137 lbs. ft.	5/8-16	Apply Loctite 262 to threads.
2 Hand Hole Cover Capscrews	5-8 lbs. ft.	1/4-12	Apply Loctite 262 to threads.
4 Mainshaft Rear Bearing Cover Capscrews	60-70 lbs. ft.	1/2-32	Apply Loctite 262 to threads.
1 Oil Fill Plug	25-35 lbs. ft.	3/4" Pipe	
1 Oil Drain Plug	45-55 lbs. ft.	3/4" Pipe	
4 Countershaft Rear Bearing Cover Capscrews	35-40 lbs. ft.	3/8"-16	Use plain flat washers. Apply Loctite 262 to threads.
12 PTO Cover Capscrews	10-20 lbs. ft.	3/8" - 16	Apply Loctite 262 to threads.

NEED THESE PARTS? 226 Eaton Fuller FS-5406A parts, priced online >> Call 877-776-4600

Pro Gear and Transmission, Inc | www.progearandtransmission.com | www.pgttruckparts.com
906 West Gore St, Orlando, Fl, 32805 | +1 (877)-776-4600 | +1 (407)-872191 | parts@eprogear.com

NEED THESE PARTS? 226 Eaton Fuller FS-5406A parts, priced online >> Call 877-776-4600

Pro Gear and Transmission, Inc | www.progearandtransmission.com | www.pgttruckparts.com
906 West Gore St, Orlando, Fl, 32805 | +1 (877)-776-4600 | +1 (407)-872191 | parts@eprogear.com

Lubrication

Proper lubrication procedures are the key to a good all-around maintenance program.

Eaton® Fuller® Transmissions are designed so that the internal parts operate in an oil circulating bath created by the motion of the gears and shafts.

All parts will be properly lubricated if these procedures are closely followed:

1. Maintain oil level. Inspect regularly.
2. Follow maintenance interval chart.
3. Use the correct grade and type of oil.
4. Buy from a reputable dealer.

Maintain Proper Oil Level

Make sure oil is level with the filler opening. Being able to reach oil with your finger does not mean oil is at proper level. **(One inch of oil level is about one gallon of oil.)**

When adding oil, never mix engine oils and gear oils in the

Oil Level

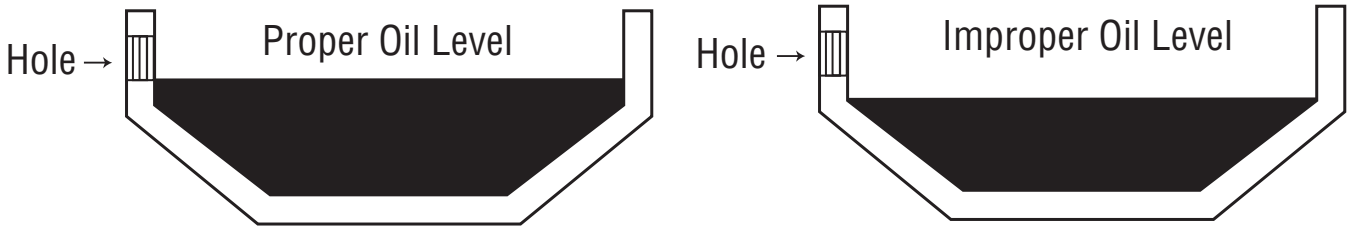

NEED THESE PARTS? 226 Eaton Fuller FS-5406A parts, priced online >> Call 877-776-4600

Pro Gear and Transmission, Inc | www.progearandtransmission.com | www.pgttruckparts.com
906 West Gore St, Orlando, Fl, 32805 | +1 (877)-776-4600 | +1 (407)-872191 | parts@eprogear.com

Maintenance Interval Chart

Eaton® Roadranger® CD50 Transmission Fluid	
HIGHWAY USE-Heavy Duty and Mid-Range Initial Fill with Eaton® Roadranger® CD50 Transmission Fluid	
Every 10,000 miles	Check fluid level. Check for leaks.
Every 250,000 miles	Change transmission fluid.
OFF-HIGHWAY USE	
Every 40 hours	Inspect lubricant level. Check for leaks.
Every 1,000 hours	Change transmission fluid where severe dirt conditions exist.
Every 2,000 hours	Change transmission fluid. (Normal off-highway use.)
HIGHWAY USE-Heavy Duty and Mid-Range Initial Fill with Other Recommended Oil	
First 3,000 to 5,000 miles	Factory fill initial drain. Refill with Eaton® Roadranger® CD50 Transmission Fluid; thereafter follow maintenance intervals above.
Heavy Duty Engine Lubricant	
HIGHWAY USE	
First 3,000 to 5,000 miles	Factory fill initial drain.
Every 10,000 miles	Inspect lubricant level. Check for leaks.
Every 50,000 miles	Change transmission lubricant.
OFF-HIGHWAY USE	
Every 30 hours	Change transmission lubricant on new units.
Every 40 hours	Inspect lubricant level. Check for leaks.
Every 500 hours	Change transmission lubricant where severe dirt conditions exist.
Every 1,000 hours	Change transmission lubricant (Normal off-highway use.)

If your vehicle has a transmission oil filter, you must change the filter when fluid or lubricant is changed.

NEED THESE PARTS? 226 Eaton Fuller FS-5406A parts, priced online >> Call 877-776-4600

Pro Gear and Transmission, Inc | www.progearandtransmission.com | www.pgttruckparts.com
906 West Gore St, Orlando, Fl, 32805 | +1 (877)-776-4600 | +1 (407)-872191 | parts@eprogear.com

Required Lubricant Chart

Type	Grade (SAE)	Fahrenheit Ambient Temperature
Eaton® Approved Synthetic Transmission Oil	50	All
Heavy Duty Engine Oil MIL-L-2104D, API-CD, or Cat TO-4	50	Above 10° F (-12° C)
	40	Above 10° F (-12° C)
	30	Below 10° F (-12° C)
Additives and friction modifiers must not be introduced. Never mix engine oils & gear oils in the same transmission.		

The use of lubricants not meeting these requirements will affect warranty coverage.

For a list of Eaton Approved Synthetic Lubricants, call 1-800-826-HELP (4357).

Buy from a reputable dealer

For a complete list of approved and reputable dealers, write to:

Eaton Corporation
Worldwide Marketing Services
P.O. Box 4013
Kalamazoo, MI 49003

Transmission Operating Angles

If the transmission operating angle is more than 12 degrees, improper lubrication will occur. The operating angle is the transmission mounting angle in the chassis plus the percent of upgrade (expressed in degrees).

LUBE LEVELS

Model	Fill Limit
FS-4005	9.5 pints
FS-5005	10.5 pints
FS-42/5205	11.5 pints
FS-62/6305	19 pints
FS-53/6306	18 pints
FS-5406	18 pints
FS/FSO-6406	19.5 pints
FSO-8406	19.5 pints

NEED THESE PARTS? 226 Eaton Fuller FS-5406A parts, priced online >> Call 877-776-4600

Pro Gear and Transmission, Inc | www.progearandtransmission.com | www.pgttruckparts.com
906 West Gore St, Orlando, Fl, 32805 | +1 (877)-776-4600 | +1 (407)-872191 | parts@eprogear.com

NEED THESE PARTS? 226 Eaton Fuller FS-5406A parts, priced online >> Call 877-776-4600

Pro Gear and Transmission, Inc | www.progearandtransmission.com | www.pgttruckparts.com
906 West Gore St, Orlando, Fl, 32805 | +1 (877)-776-4600 | +1 (407)-872191 | parts@eprogear.com

Recommended Tools

Some repair procedures pictured in this manual show the use of specialized tools. Their actual use is recommended as they make transmission repair easier, faster, and prevent costly damage to critical parts.

But for the most part, ordinary mechanic's tools such as socket wrenches, screwdrivers, etc., and other standard shop items such as a press, mauls and soft bars are all that is needed to successfully disassemble and reassemble any Eaton Fuller Transmission.

The specialized tools can be obtained from a tool supplier or made from tool prints as required by the individual user. Detailed Eaton Fuller Transmission Tool Prints are available upon request by writing to:

Eaton Corporation
Truck Components Operations
Technical Service
P.O. Box 4013
Kalamazoo, Michigan 49003

SPECIAL TOOLS

REFERENCE NUMBER	TOOL	HOW OBTAINED
T1	Tension Spring Driver	Made from Fuller Transmission Print T-11938
T2	Snap Ring Pliers	Tool Supplier
T3	Impact Puller (1/2-13 Threaded End)	Tool Supplier
T4	Countershaft Support Tools and Bearing Driver	Made from Fuller Transmission Print T-22913-C
T5	Bearing Guide	Made from Fuller Transmission Print T-18042-110
T6	Oil Seal Driver, Rear Bearing Cover	Made from Fuller Transmission Print T-18088-61
T7	Input Shaft Nut Installer	Made from Fuller Transmission Print T-22553-A
T8	Torque Wrench, 1000 lbs. ft. Capacity	Tool Supplier
T9	Oil Seal Driver, Front Bearing Cover (push type clutch)	Made from Fuller Transmission Print T-18088-67
T10	Oil Seal Driver, Front Bearing Cover (pull type clutch)	Made from Fuller Transmission Print T-18088-64

Special Tools Manufacturers

Below are the addresses and phone numbers of the companies that make tools specifically for Eaton® Fuller® transmissions.

G and W Tool Company
1105 E. Louisville
Broken Arrow, OK 74012-5724
800-247-5882

Great Lakes Tool
8530 M-89
Richland, MI 49083
800-877-9618

O.T.C.
655 Eisenhower Dr.
Owatonna, MN 55060-1171
800-533-6127

The specialized tools can be obtained from a tool supplier or made from tool prints as required by the individual user. Detailed Eaton Fuller Transmission Tool Prints are available upon request by writing to:

Eaton Corporation
Truck Components Operations
Technical Service
P.O. Box 4013
Kalamazoo, Michigan 49003

NEED THESE PARTS? 226 Eaton Fuller FS-5406A parts, priced online >> Call 877-776-4600

Pro Gear and Transmission, Inc | www.progearandtransmission.com | www.pgttruckparts.com
906 West Gore St, Orlando, Fl, 32805 | +1 (877)-776-4600 | +1 (407)-872191 | parts@eprogear.com

NEED THESE PARTS? 226 Eaton Fuller FS-5406A parts, priced online >> Call 877-776-4600

Pro Gear and Transmission, Inc | www.progearandtransmission.com | www.pgttruckparts.com
906 West Gore St, Orlando, Fl, 32805 | +1 (877)-776-4600 | +1 (407)-872191 | parts@eprogear.com

Preventive Maintenance

Everyday there are countless vehicles operating over the highways with transmissions in such a neglected mechanical condition, they can be referred to as failures looking for a place to break down. They lack a proper and organized preventive maintenance program.

Preventive maintenance is a general term which applies to all procedures necessary to have maximum life and satisfactory service at the lowest possible cost, short of removing and repairing the unit.

A number of conditions contrary to good preventive maintenance can generally be pointed to when inspecting a failed transmission. Taking a few minutes every so many hours or miles to do a few simple checks could help avoid eventual breakdown or reduce the repair cost. If the transmission is not cared for, it will breakdown.

Transmission appearance may differ, however the procedure is the same.

Checks Before Transmission Removal

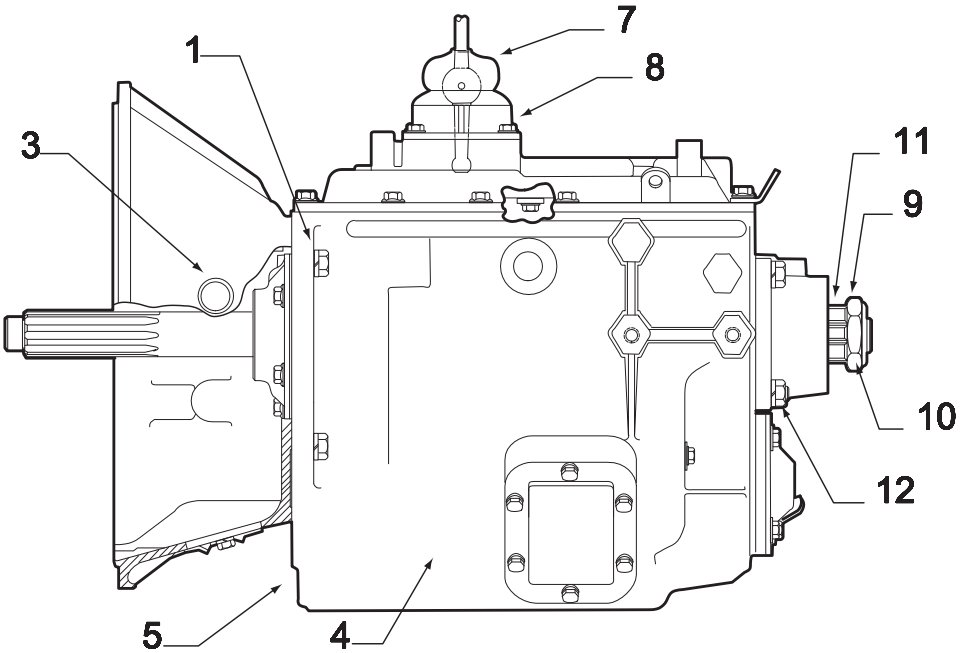

Note: Transmission appearance may differ, the procedure is the same.

Clutch Housing Mounting (1)

- Check all capscrews of clutch housing flange for looseness.

Clutch Release Bearing (Not Shown)

- Remove hand hole cover and check radial and axial clearance in release bearing.
- Check relative position of thrust surface of release bearing with thrust sleeve on push-type clutches.

Clutch Pedal Shaft and Bores (3)

- Pry upward on shafts to check wear.
- If excessive movement is found, remove clutch release mechanism and check bushings on bores and wear on shafts. See OEM literature.

Lubricant (4)

- Change at specified service intervals.
- Use only the types and grades as recommended. See "Recommended Lubrication Chart".

NEED THESE PARTS? 226 Eaton Fuller FS-5406A parts, priced online >> Call 877-776-4600

Pro Gear and Transmission, Inc | www.progearandtransmission.com | www.pgttruckparts.com
906 West Gore St, Orlando, Fl, 32805 | +1 (877)-776-4600 | +1 (407)-872191 | parts@eprogear.com

Filler and Drain Plugs (5)

- Remove filler plugs and check level of lubricant at specified intervals. Tighten fill and drain plugs securely.

Capscrews and Gaskets (6)

- Check all capscrews, especially those on PTO covers and rear bearing covers for looseness which would cause oil leakage.
- Check PTO opening and rear bearing covers for oil leakage due to faulty gasket.

Gear Shift Lever (7)

- Check for looseness and free play in housing. If lever is loose in housing, check Gear Shift Lever Housing Assembly.

Gear Shift Lever Housing Assembly (8)

- Remove the gear shift lever housing assembly from the transmission.
- Check the tension spring and washer for set and wear.
- Check gear shift lever bottom end for wear in the slots and check for wear of finger assembly and housing.

Checks With Drive Line Dropped

Universal Joint Companion Flange or Yoke Nut (9)

- Check for tightness. Tighten to recommended torque.

Output Shaft (Yoke Nut Tightened)

- Pry upward against output shaft to check radial clearance in mainshaft rear bearing.

Checks With Universal Joint Companion Flange or Yoke Removed

Note: If necessary, use solvent and shop rag to clean sealing surface of companion flange or yoke. Do not use crocus cloth, emery paper, or other abrasive materials that will mar surface finish.

Splines on Output Shaft (11)

- Check for wear from movement and chucking action of the universal joint companion flange or yoke.

Mainshaft Rear Bearing Cover (12)

- Check oil seal for wear.

NEED THESE PARTS? 226 Eaton Fuller FS-5406A parts, priced online >> Call 877-776-4600

Pro Gear and Transmission, Inc | www.progearandtransmission.com | www.pgttruckparts.com
906 West Gore St, Orlando, Fl, 32805 | +1 (877)-776-4600 | +1 (407)-872191 | parts@eprogear.com

Inspection

Part to Inspect	What to Check For	Action to be Done
Speedometer Connections	Speedometer cables should not be loose.	Applied hydraulic thread sealant #71208 to threads. Torque speedometer sleeve to 35-50 lbs. ft.
	Should be an O-ring or gasket between the mating speedometer sleeve and the rear bearing cover.	Replace the O-ring/gasket if damaged or missing.
Rear Bearing Cover Nuts	Check retaining nuts for tightness.	Apply Eaton Sealant #71225 to the capscrew threads. Torque capscrews to 60-70 lbs. ft.
Output Yoke Retaining Nut	Check the output yoke retaining nut for tightness.	Torque the output yoke retaining nut to 300-350 lbs. ft. (For FS-6106 series: 235-275 lbs. ft.) Do not over torque the output nut.
PTO Covers and Openings	Check the capscrews for tightness.	Apply Eaton Sealant #71225 to the capscrew threads, if not precoated. Tighten PTO capscrews to 10-20 lbs. ft.
Front Bearing Cover	Check front bearing cover, front case, shift bar housing, rear bearing cover, and clutch housing for cracks or breaks.	Replace parts found to be damaged.
	Check the capscrews for tightness.	Tighten the capscrews to 15-25 lbs. ft.
Oil Drain Plug, Oil Fill Plug	Check the oil drain plug and the oil fill plug for leakage.	Torque the oil drain plug to 45-55 lbs. ft. Torque the oil fill plug to 25-35 lbs. ft.

Rear Seal Maintenance

Leakage in transmission rear seals is perhaps the most common problem in truck transmissions. The problem is more than a nuisance because if not repaired, a leaking seal can lead to catastrophic transmission failure. There have been strides in reducing leakage through improved designs and the use of new seal materials. However, the most important way to reduce this problem continues to be through proper service and installation procedures.

It can be very time consuming and expensive to replace a rear seal system, then find the oil seal system was not causing the oil leakage. Using the following checklist, inspect the transmission to insure proper identification of the leak path.

Before disassembling the rear seal system, clean the rear bearing cover, the rear seal, and the output yoke. DO NOT USE A HIGH PRESSURE SPRAY WASHER TO CLEAN THE REAR SEAL SYSTEM. USE A CLEAN DRY CLOTH. Run the vehicle, then inspect these areas for oil leaks.

For more detailed information on rear seal maintenance, order TCSM-0912, "Seal Maintenance Guide." To receive a Product Literature Order Form, write to:

Eaton Corporation
Global Marketing Services
P.O. Box 4013
Kalamazoo, MI 49003

NEED THESE PARTS? 226 Eaton Fuller FS-5406A parts, priced online >> Call 877-776-4600

Pro Gear and Transmission, Inc | www.progearandtransmission.com | www.pgttruckparts.com
906 West Gore St, Orlando, Fl, 32805 | +1 (877)-776-4600 | +1 (407)-872191 | parts@eprogear.com

NEED THESE PARTS? 226 Eaton Fuller FS-5406A parts, priced online >> Call 877-776-4600

Pro Gear and Transmission, Inc | www.progearandtransmission.com | www.pgttruckparts.com
906 West Gore St, Orlando, Fl, 32805 | +1 (877)-776-4600 | +1 (407)-872191 | parts@eprogear.com

Power Flow

The transmission must efficiently transfer the engine's power, in terms of torque, to the vehicle's rear wheels. Knowledge of what takes place in the transmission during torque transfer is essential when trouble-shooting and when making repairs become necessary.

1. Power (torque) from the engine is transferred to the transmission input shaft.
2. Torque is transferred to countershaft drive gear.
3. Torque is delivered along countershaft to all countershaft gears.
4. Torque is transferred to "engaged" mainshaft gear. The cross section view illustrates 1st speed gear position.
5. The engaged mainshaft gear external clutching teeth transfer torque to the mainshaft through the synchronizer assembly or sliding clutch.
6. The mainshaft transfers torque directly to driveshaft through the output yoke.

FS-5205 First Gear

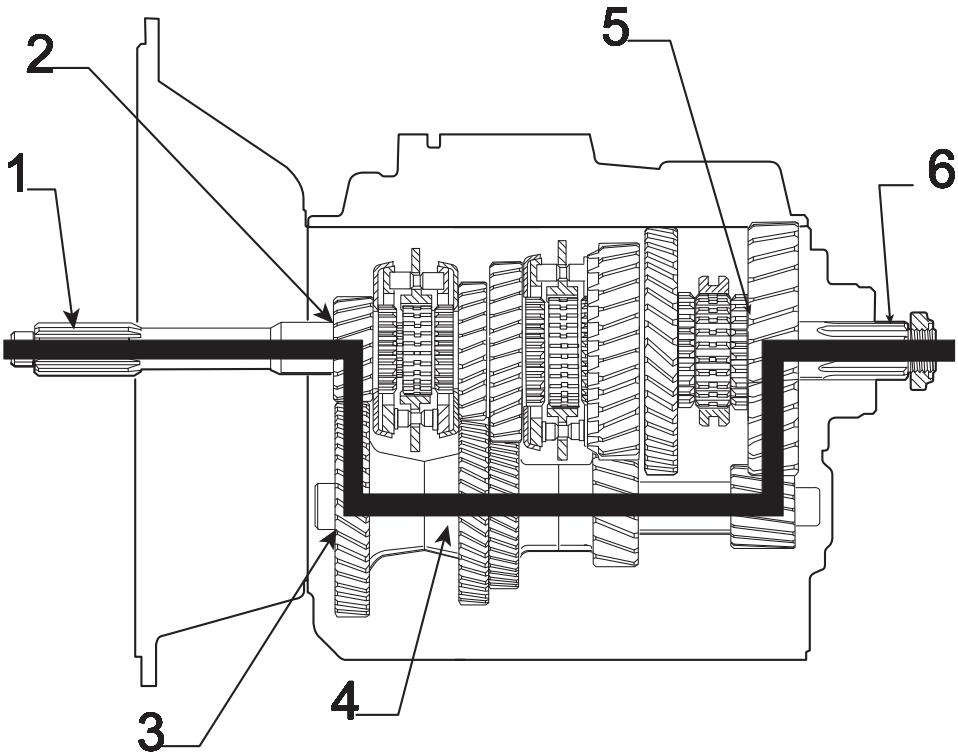

NEED THESE PARTS? 226 Eaton Fuller FS-5406A parts, priced online >> Call 877-776-4600

Pro Gear and Transmission, Inc | www.progearandtransmission.com | www.pgttruckparts.com
906 West Gore St, Orlando, Fl, 32805 | +1 (877)-776-4600 | +1 (407)-872191 | parts@eprogear.com

FS-5205 Second Gear

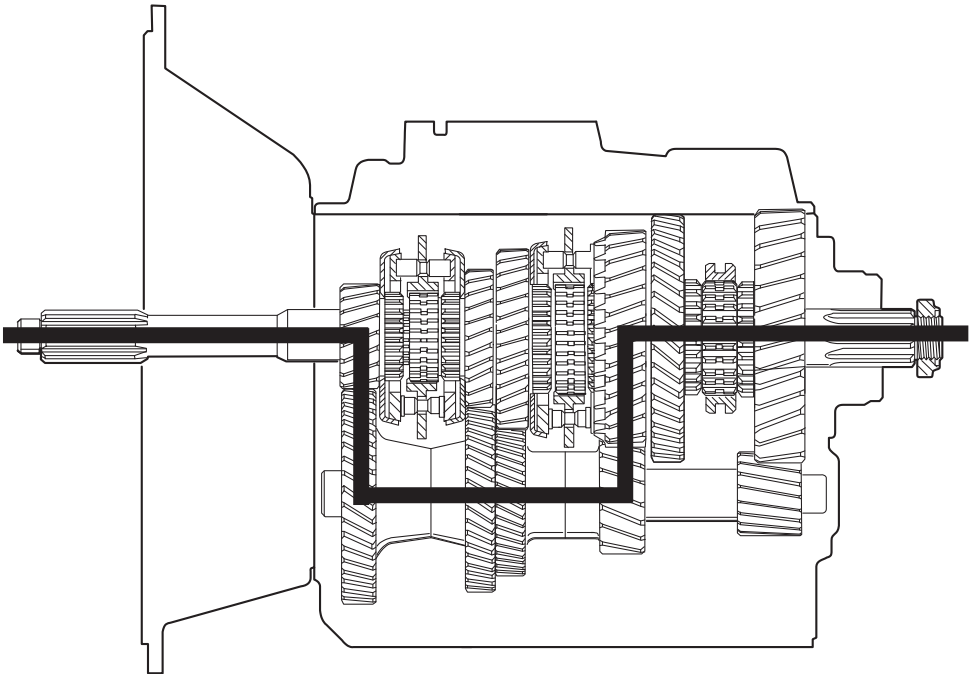

FS-5205 Third Gear

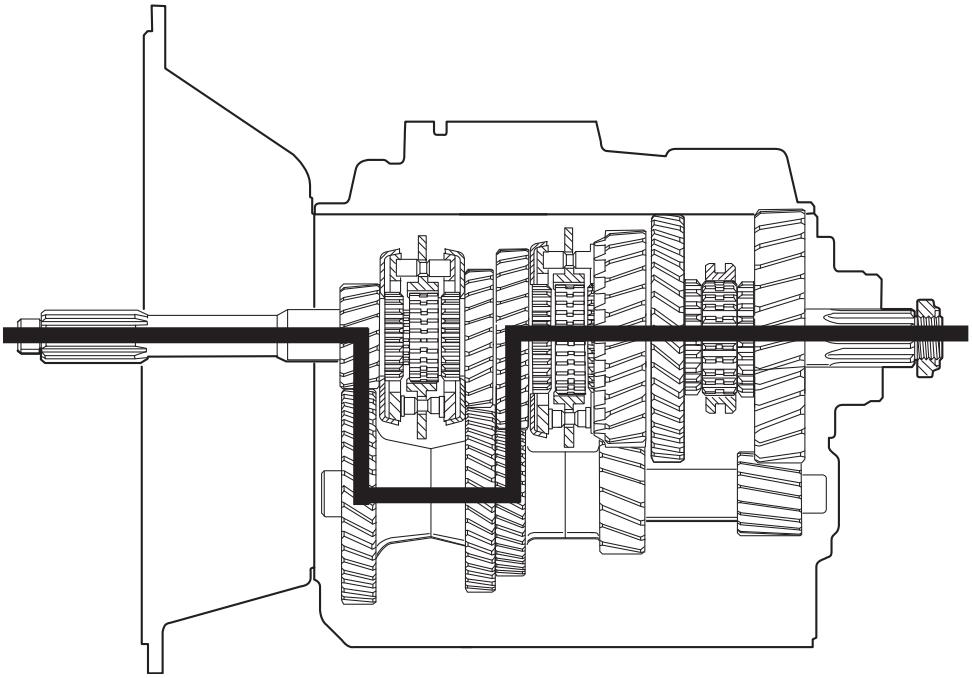

NEED THESE PARTS? 226 Eaton Fuller FS-5406A parts, priced online >> Call 877-776-4600

Pro Gear and Transmission, Inc | www.progearandtransmission.com | www.pgttruckparts.com
906 West Gore St, Orlando, Fl, 32805 | +1 (877)-776-4600 | +1 (407)-872191 | parts@eprogear.com

FS-5205 Fourth Gear

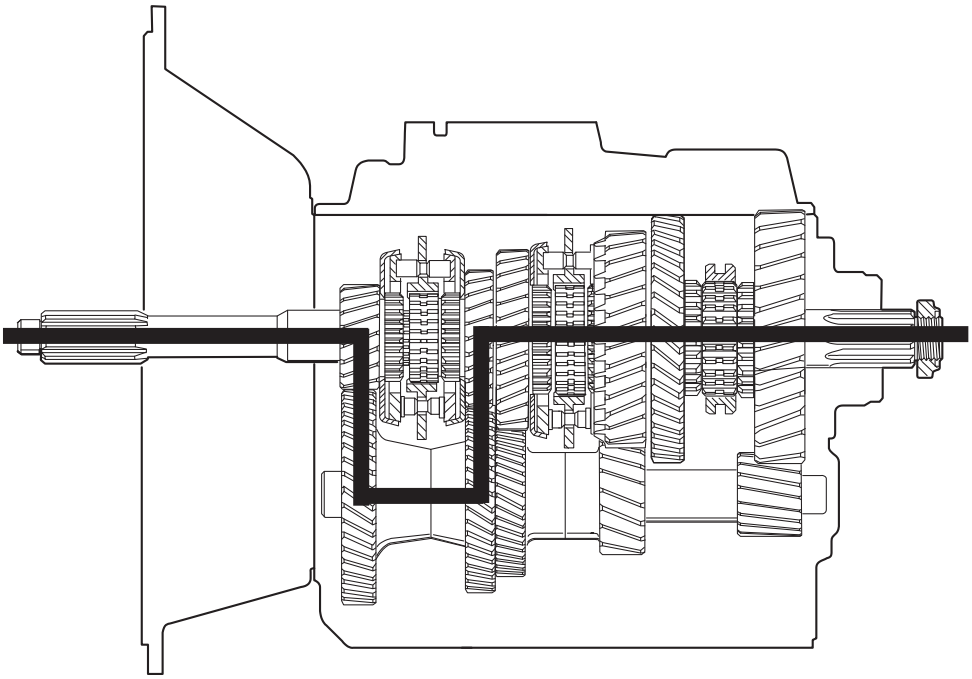

FS-5205 Fifth Gear or Direct

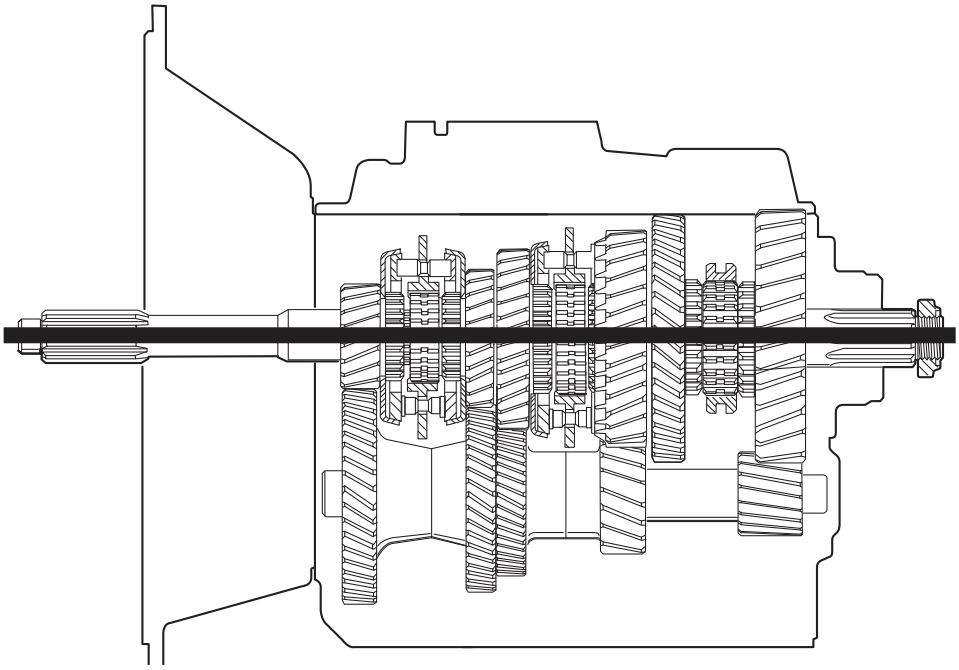

NEED THESE PARTS? 226 Eaton Fuller FS-5406A parts, priced online >> Call 877-776-4600

Pro Gear and Transmission, Inc | www.progearandtransmission.com | www.pgttruckparts.com
906 West Gore St, Orlando, Fl, 32805 | +1 (877)-776-4600 | +1 (407)-872191 | parts@eprogear.com

How to Remove the Gear Shift Lever

Special Instructions

Remote control housings are removed the same way as gear shift levers.

Procedure -

1. From the gear shift lever base, remove the four (4) retaining capscrews.

2. To break the gasket seal, lightly jar the gear shift housing.
3. Remove the gear shift lever housing.
4. Remove the gasket and clean all mounting surfaces of gasket material.

NEED THESE PARTS? 226 Eaton Fuller FS-5406A parts, priced online >> Call 877-776-4600

Pro Gear and Transmission, Inc | www.progearandtransmission.com | www.pgttruckparts.com
906 West Gore St, Orlando, Fl, 32805 | +1 (877)-776-4600 | +1 (407)-872191 | parts@eprogear.com

How to Install the Gear Shift Lever

Special Instructions

Remote control housings are installed the same way as gear shift levers.

Make sure the shift block and yoke notches are aligned in the neutral position.

Procedure -

1. Position a new gear shift lever gasket on the gear shift lever mounting surface.
2. Fit the gear shift lever into the shift block.
3. Apply Eaton/Fuller Sealant #71225 or equivalent to the retaining capscrews, if not precoated.
4. Install the retaining capscrews, tighten to 20-25 lbs. ft. of torque.

Final Check

Make sure the capscrews are properly torqued.

Make sure you can shift the transmission.

NEED THESE PARTS? 226 Eaton Fuller FS-5406A parts, priced online >> Call 877-776-4600

Pro Gear and Transmission, Inc | www.progearandtransmission.com | www.pgttruckparts.com
906 West Gore St, Orlando, Fl, 32805 | +1 (877)-776-4600 | +1 (407)-872191 | parts@eprogear.com

How to Remove the Shift Bar Housing

Special Instructions

There are two (2) lengths of capscrews. The 1 1/2" capscrews are used with the lifting eyes. Note their location.

Shift transmission into neutral position.

Procedure -

1. From the shift bar housing rim, remove the retaining capscrews.

2. To break the gasket seal, jar the shift bar housing.
3. Remove the shift bar housing.
4. Remove the gasket and clean all mounting surfaces of gasket material.

NEED THESE PARTS? 226 Eaton Fuller FS-5406A parts, priced online >> Call 877-776-4600

Pro Gear and Transmission, Inc | www.progearandtransmission.com | www.pgttruckparts.com
906 West Gore St, Orlando, Fl, 32805 | +1 (877)-776-4600 | +1 (407)-872191 | parts@eprogear.com

How to Install the Shift Bar Housing

Special Instructions

There are two (2) lengths of capscrews. The 1 1/2" capscrews are used with the lifting eyes.

Apply Eaton/Fuller gasket sealant #71233 or equivalent to shift bar housing gasket before assembly.

Procedure -

1. Place the shift bars in the neutral position.

2. Place the synchronizers in the neutral position.

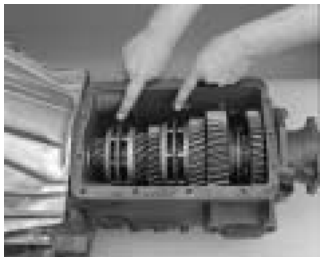

3. Position a new shift bar housing gasket on the shift bar housing mounting surface.

4. As you install the shift bar housing, make sure the yokes fit onto the corresponding synchronizers.

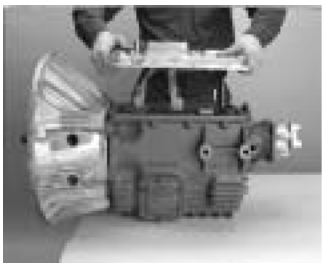

5. Apply Eaton/Fuller sealant #71225 or equivalent to the retaining capscrews, if not precoated.

6. Install the center rear retaining capscrew first and the center front retaining capscrew second, tighten to 35-40 lbs. ft. of torque.

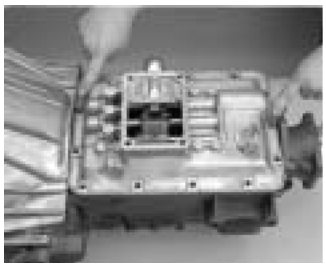

7. Install the remaining capscrews, tighten to 35-40 lbs. ft. of torque.

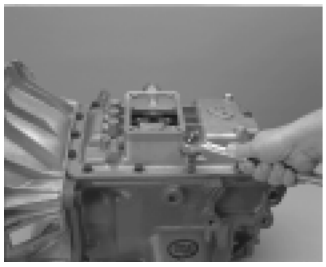

Final Check

Make sure the capscrews are properly torqued.

NEED THESE PARTS? 226 Eaton Fuller FS-5406A parts, priced online >> Call 877-776-4600

Pro Gear and Transmission, Inc | www.progearandtransmission.com | www.pgttruckparts.com
906 West Gore St, Orlando, Fl, 32805 | +1 (877)-776-4600 | +1 (407)-872191 | parts@eprogear.com

How to Remove the Output Yoke/Companion Flange

Special Instructions

You must remove the shift bar housing in order to lock the transmission.

Special Tools

A large breaker bar or air impact wrench

Procedure -

1. Engage two (2) mainshaft synchronizers into two (2) mainshaft gears to lock the transmission.

2. Use a breaker bar to remove the nut from the output shaft.

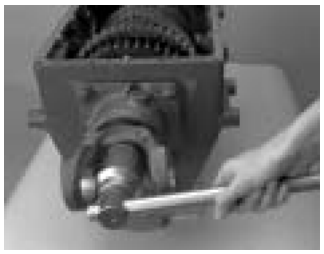

3. Pull the output yoke or flange straight to the rear and off the output shaft.

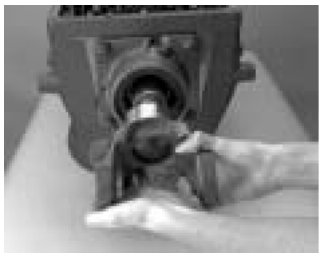

NEED THESE PARTS? 226 Eaton Fuller FS-5406A parts, priced online >> Call 877-776-4600

Pro Gear and Transmission, Inc | www.progearandtransmission.com | www.pgttruckparts.com
906 West Gore St, Orlando, Fl, 32805 | +1 (877)-776-4600 | +1 (407)-872191 | parts@eprogear.com

How to Install the Output Yoke/Companion Flange

Special Instructions

You must remove the shift bar housing in order to lock the transmission.

Special Tools

Torque wrench with 500 lbs. ft. capacity

Procedure -

1. Engage two (2) mainshaft synchronizers into two (2) mainshaft gears to lock the transmission.

2. Install the speedometer drive gear rotor or replacement spacer on the output shaft inside the rear bearing cover.

3. Slide the companion flange or yoke onto the output shaft.

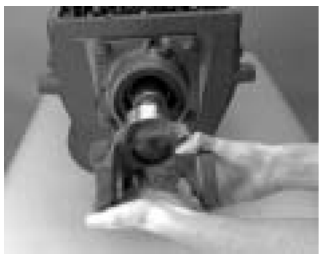

4. Install the output shaft nut, tighten to 300-350 lbs. ft. of torque.

Final Check

Make sure the output shaft nut is properly torqued.

Unlock the transmission.

NEED THESE PARTS? 226 Eaton Fuller FS-5406A parts, priced online >> Call 877-776-4600

Pro Gear and Transmission, Inc | www.progearandtransmission.com | www.pgttruckparts.com
906 West Gore St, Orlando, Fl, 32805 | +1 (877)-776-4600 | +1 (407)-872191 | parts@eprogear.com

How to Remove the Clutch Housing

Special Instructions

Removal of the clutch housing is done in the horizontal position.

Procedure -

1. Remove the four clutch housing retaining bolts from the case and clutch housing.

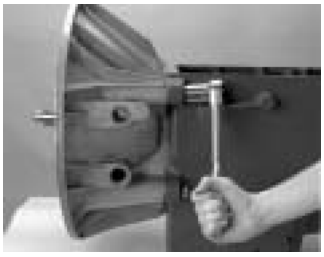

2. Jar clutch housing with a rubber mallet and pull the clutch housing from transmission case.

NEED THESE PARTS? 226 Eaton Fuller FS-5406A parts, priced online >> Call 877-776-4600

Pro Gear and Transmission, Inc | www.progearandtransmission.com | www.pgttruckparts.com
906 West Gore St, Orlando, Fl, 32805 | +1 (877)-776-4600 | +1 (407)-872191 | parts@eprogear.com

How to Install the Clutch Housing

Procedure -

1. Position clutch housing on front of transmission.

2. Install four retaining bolts and torque to the recommended torque.

NEED THESE PARTS? 226 Eaton Fuller FS-5406A parts, priced online >> Call 877-776-4600

Pro Gear and Transmission, Inc | www.progearandtransmission.com | www.pgttruckparts.com
906 West Gore St, Orlando, Fl, 32805 | +1 (877)-776-4600 | +1 (407)-872191 | parts@eprogear.com

Functions of a Shift Bar Housing

Shift bar housings are a very important part of the transmission. No matter what kind of shift bar housing your transmission has, they all provide the same functions:

- Engage the transmission gearing,
- Prevents the driver from shifting into 2 gears at the same time,
- Prevents shifting into reverse without force,
- Actuates the back up lights,
- Actuates the neutral switches.

NEED THESE PARTS? 226 Eaton Fuller FS-5406A parts, priced online >> Call 877-776-4600

Pro Gear and Transmission, Inc | www.progearandtransmission.com | www.pgttruckparts.com
906 West Gore St, Orlando, Fl, 32805 | +1 (877)-776-4600 | +1 (407)-872191 | parts@eprogear.com

How to Disassemble the Gear Shift Lever

Special Instructions

For safety reasons when disassembling the gear shift lever, release the spring one coil at a time.

WARNING: Wear safety glasses when removing spring.

Special Tools

Vise with brass jaws or wood blocks

Procedure -

1. Remove the shift lever boot.

2. Slide the boot up the shift lever shaft and remove.

3. With housing bottom facing up, secure the assembly in a vise.

4. Use large screwdriver to twist between the spring and housing, forcing the spring from under the housing lugs.

5. From inside the housing tower, remove the tension spring, washer, and gear shift lever.

6. From the housing tower remove spade pin bores, and inspect the spade pins, discard if damaged.

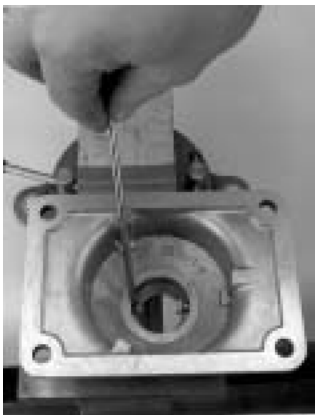

7. If housing tower spade pin bores are worn, discard the housing tower and replace with a new housing tower.

NEED THESE PARTS? 226 Eaton Fuller FS-5406A parts, priced online >> Call 877-776-4600

Pro Gear and Transmission, Inc | www.progearandtransmission.com | www.pgttruckparts.com
906 West Gore St, Orlando, Fl, 32805 | +1 (877)-776-4600 | +1 (407)-872191 | parts@eprogear.com

How to Assemble the Gear Shift Lever

Special Instructions

Inspect tension spring, washer, and pivot pin bores for wear. (Replace, if oblong.)

Apply oil to the shift lever pivot ball and housing socket prior to assembly.

Seat the tension spring one coil at a time.

Special Tools

See Recommended Tools on page 13.

Vise with brass jaws or wood blocks

Item T1: Tension spring driver

Procedure -

1. With housing bottom facing up, secure the assembly in a vise.

2. If housing tower pivot pin bores are worn, discard the housing tower and replace with a new housing tower.

3. If the pivot pins are damaged, replace and install the pivot pins in housing tower bore.

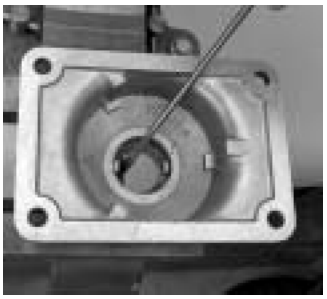

4. Align the lever ball slot with the pivot pin and position the gear shift lever in the housing tower.

5. With dished-side up, install the washer over the ball.

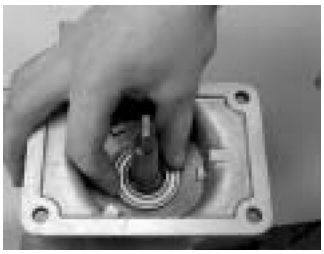

6. Use a tension spring driver to install the tension spring under the housing lugs.

7. Remove the assembly from the vise.

8. Install a rubber boot over the gear shift lever and against the housing.

9. Install the shift lever grip.

Final Check

Make sure the gear shift lever can move.

How to Disassemble the FS-4205 Shift Bar Housing

Special Instructions

The shift bar housing must be removed from the transmission.

During disassembly, lay all parts on a clean bench in order of removal to facilitate assembly.

Shift bars not being removed must be kept in the neutral position or the interlocking parts lock the bars.

Start with 1st-reverse yoke assembly.

When removing the interlock balls, detent balls, and springs, remove the interlock and detent balls before removing the springs.

Procedure -

1. Lay shift bar housing on work bench. Shift 4th-5th yoke assembly into 4th speed position. Remove capscrews and retainers.

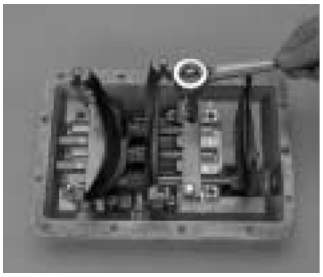

2. Remove 1st-reverse yoke assembly.

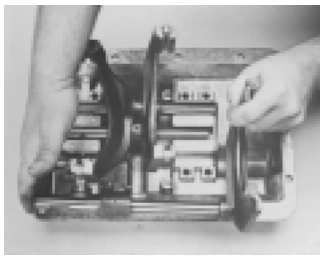

3. Remove 2nd-3rd yoke assembly and interlock pin.

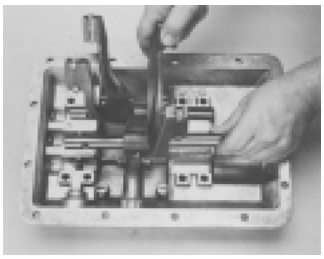

4. Remove 4th-5th yoke assembly. If the yoke pad bushings are to be replaced, remove worn pad from shift yoke, install new pad and bend tabs over top and bottom of yoke.

   Note: If yoke replacement is required, yoke can be removed by driving the roll pin through the yoke and rail with a punch and hammer.

   Note: Install new yoke by aligning shift yoke with shift bar alignment hole and insert lock pin.

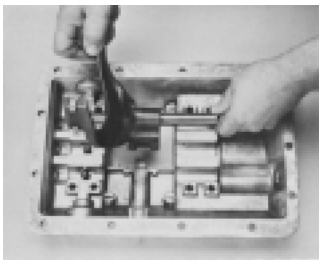

5. Remove interlock balls, detent balls, and springs.

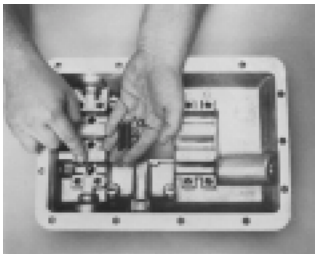

NEED THESE PARTS? 226 Eaton Fuller FS-5406A parts, priced online >> Call 877-776-4600

Pro Gear and Transmission, Inc | www.progearandtransmission.com | www.pgttruckparts.com
906 West Gore St, Orlando, Fl, 32805 | +1 (877)-776-4600 | +1 (407)-872191 | parts@eprogear.com

How to Assemble the FS-4205 Shift Bar Housing

Special Instructions

Interlock balls, detent balls, and springs can be used interchangeably.

Lubricate yoke pads and inserts with oil before assembly.

Lubricate yoke bar grooves with grease before assembly.

Keep yoke bars in neutral while assembling.

The shift yoke retainer holes are not tapped on new shift bar housings. The capscrews that are used are "thread forming" and can be reused if the shift bar housing is replaced.

It may be necessary to support the yoke bars in position while installing the retainers.

Procedure -

1. Install interlock balls, detent balls and springs in the following sequence;
   A. Position (3) balls in the reverse light switch bore.
   B. Install 1st-reverse detent spring and ball.
   C. Position (2) balls in adjacent cross bore.
   D. Install 2nd-3rd detent spring and ball.
   E. Position (2) balls in adjacent cross bore
   F. Install 4th-5th detent spring and ball.

   Note: Balls and springs can be used interchangeably.

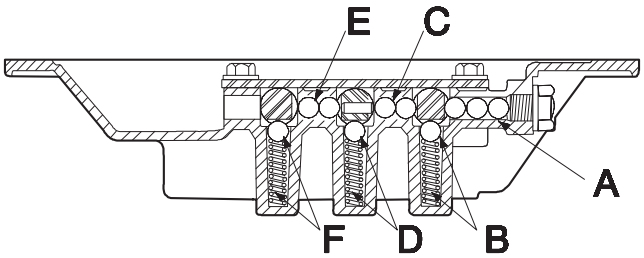

2. Position 1st-reverse yoke in housing assembly as shown.

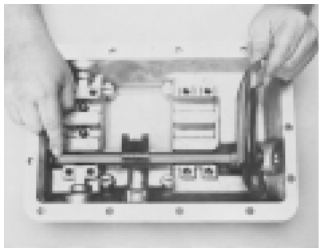

3. Install interlock pin in 2nd-3rd yoke assembly and position as shown.

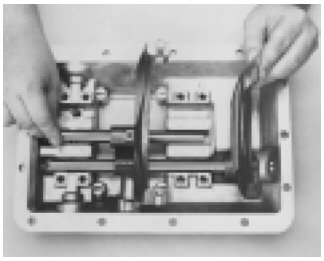

4. Position 4th-5th yoke assembly in housing as shown.

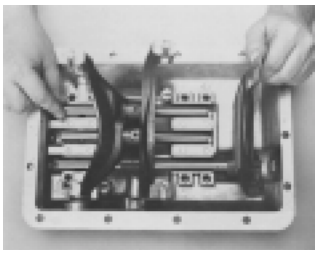

NEED THESE PARTS? 226 Eaton Fuller FS-5406A parts, priced online >> Call 877-776-4600

Pro Gear and Transmission, Inc | www.progearandtransmission.com | www.pgttruckparts.com
906 West Gore St, Orlando, Fl, 32805 | +1 (877)-776-4600 | +1 (407)-872191 | parts@eprogear.com

5. Position shift yokes as shown. Install front and rear retainer over shift rails and install front two capscrews. Tighten all rail support capscrews to 20-25 lbs. ft. (27-34 N•m).

   Note: It may be necessary to support rails in proper position while installing rail supports.

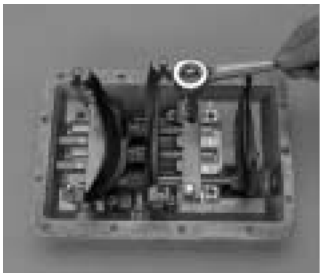

NEED THESE PARTS? 226 Eaton Fuller FS-5406A parts, priced online >> Call 877-776-4600

Pro Gear and Transmission, Inc | www.progearandtransmission.com | www.pgttruckparts.com
906 West Gore St, Orlando, Fl, 32805 | +1 (877)-776-4600 | +1 (407)-872191 | parts@eprogear.com

How to Disassemble the FS-5205 Shift Bar Housing

Special Instructions

The shift bar housing must be removed from the transmission.

During disassembly, lay all parts on a clean bench in order of removal to facilitate assembly.

Shift bars not being removed must be kept in the neutral position or the interlocking parts lock the bars.

Start with 4th-5th yoke assembly.

When removing the interlock balls, detent balls, and springs, remove the interlock and detent balls before removing the springs.

Special Tools

Magnet

Procedure -

1. With the housing rear to the right, lay the assembly on a flat surface.

2. In order to remove the front retaining capscrews, shift 4th-5th yoke assembly into 4th gear position (rearward).

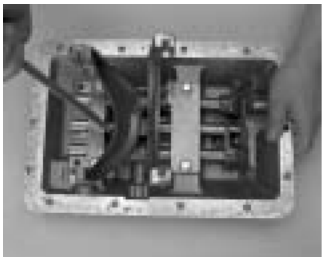

3. Remove capscrews and retainers.

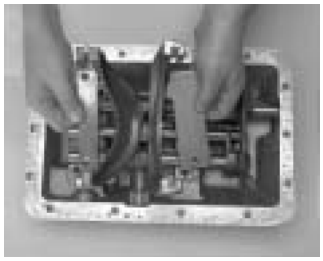

4. Remove 4th-5th yoke assembly.

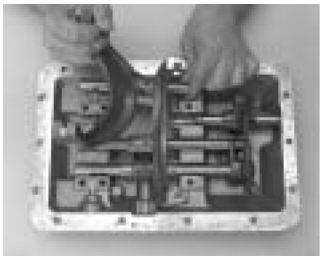

5. Remove 2nd-3rd yoke assembly and interlock pin.

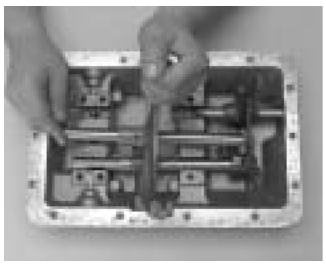

6. Remove 1st-reverse bar assembly.

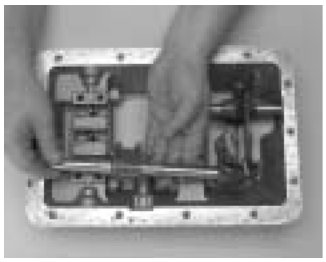

NEED THESE PARTS? 226 Eaton Fuller FS-5406A parts, priced online >> Call 877-776-4600

Pro Gear and Transmission, Inc | www.progearandtransmission.com | www.pgttruckparts.com
906 West Gore St, Orlando, Fl, 32805 | +1 (877)-776-4600 | +1 (407)-872191 | parts@eprogear.com

7. If necessary, remove 1st-reverse bar front spacer.

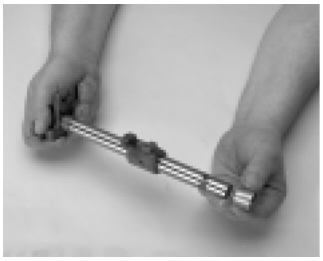

8. From the 1st-reverse yoke assembly, remove the 1st-reverse lock pin.

9. Remove the 1st-reverse assembly.

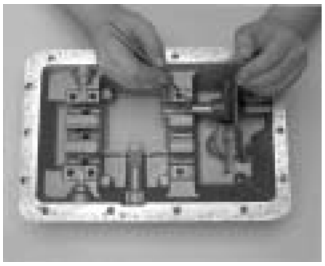

10. Remove the 1st-reverse actuator.

11. Remove the four (4) interlock balls, the three (3) detent balls, the three (3) back up light switch balls, and the three (3) springs.

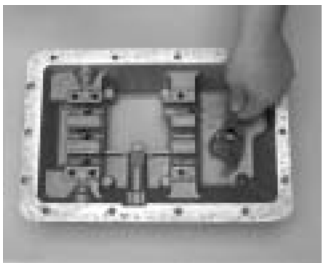

12. Inspect the yoke pad bushings. If the pads are worn, remove worn pad from shift yoke, install new pad and bend tabs over yoke top and bottom.

13. Inspect the yokes. If the yokes are damaged, remove by driving the roll pin through the yoke and rail.

NEED THESE PARTS? 226 Eaton Fuller FS-5406A parts, priced online >> Call 877-776-4600

Pro Gear and Transmission, Inc | www.progearandtransmission.com | www.pgttruckparts.com
906 West Gore St, Orlando, Fl, 32805 | +1 (877)-776-4600 | +1 (407)-872191 | parts@eprogear.com

How to Assemble the FS-5205 Shift Bar Housing

Special Instructions

Interlock balls, detent balls, and springs can be used interchangeably.

Lubricate yoke pads and inserts with oil before assembly.

Lubricate yoke bar grooves with grease before assembly.

Keep yoke bars in neutral while assembling.

The shift yoke retainer holes are not tapped on new shift bar housings. The capscrews that are used are "thread forming" and can be reused if the shift bar housing is replaced.

It may be necessary to support the yoke bars in position while installing the retainers.

Procedure -

1. Install interlock balls, detent balls and springs in the following sequence;
   A. Position (3) balls in the reverse light switch bore.
   B. Install 1st-reverse detent spring and ball.
   C. Position (2) balls in adjacent cross bore.
   D. Install 2nd-3rd detent spring and ball.
   E. Position (2) balls in adjacent cross bore
   F. Install 4th-5th detent spring and ball.

   Note: Balls and springs can be used interchangeably.

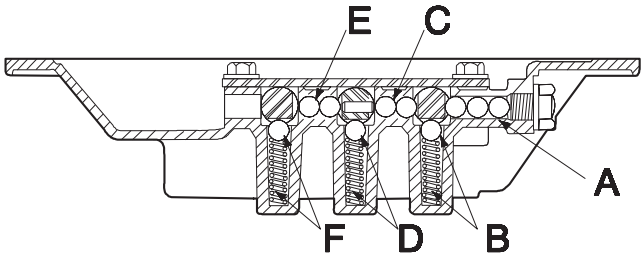

2. Over the actuator pivot pin, seat the 1st reverse actuator.

3. Position 1st-reverse yoke in housing assembly as shown.

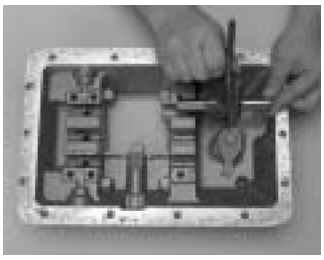

4. Install the 1st-reverse lock pin in the yoke assembly.

5. Position 1st-reverse bar assembly in the housing.

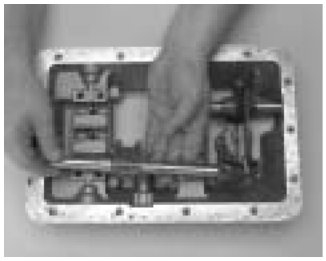

6. Install interlock pin in 2nd-3rd yoke assembly and position as shown.

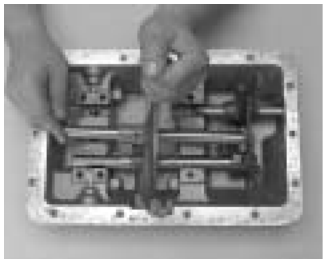

7. Position 4th-5th yoke assembly in housing as shown.

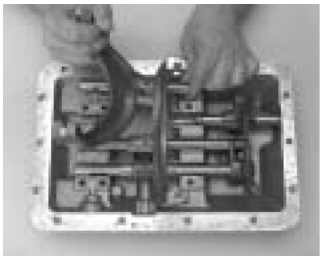

8. Position retainers, front retainer in rear set of holes.

9. Install the capscrews in rear retainer. Tighten all rail support capscrews to 20-25 lbs. ft. (27-34 N•m).

   Note: It may be necessary to support rails in proper position while installing rail supports.

10. Carefully shift the 4th-5th yoke into 4th gear position (rearward).

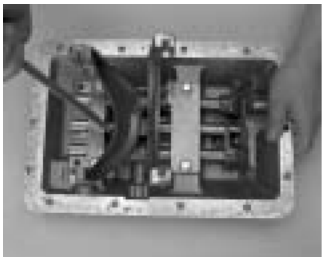

11. Install the capscrews in front retainer. Tighten all rail support capscrews to 20-25 lbs. ft. (27-34 N•m).

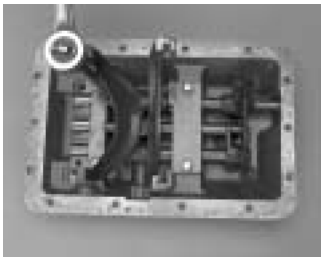

NEED THESE PARTS? 226 Eaton Fuller FS-5406A parts, priced online >> Call 877-776-4600

Pro Gear and Transmission, Inc | www.progearandtransmission.com | www.pgttruckparts.com
906 West Gore St, Orlando, Fl, 32805 | +1 (877)-776-4600 | +1 (407)-872191 | parts@eprogear.com

How to Disassemble the FS-6205/6305 Shift Bar Housing

Special Instructions

The shift bar housing must be removed from the transmission.

During disassembly, lay all parts on a clean bench in order of removal to facilitate assembly.

Shift bars not being removed must be kept in the neutral position or the interlocking parts lock the bars.

Start with 1st-reverse yoke assembly.

When removing the interlock balls, detent balls, and springs, remove the interlock and detent balls before removing the springs.

Procedure -

1. With the housing rear to the right, lay the assembly on a flat surface.

2. In order to remove the front retaining capscrews, shift 4th-5th yoke assembly into 4th gear position (rearward).

3. Remove capscrews and retainers.

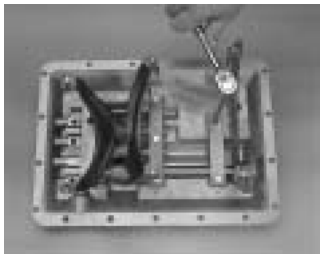

4. Remove 1st-reverse yoke assembly.

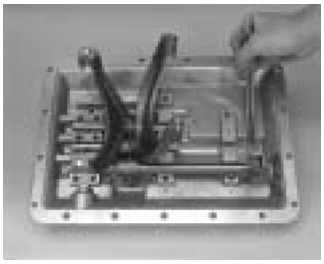

5. Remove 2nd-3rd yoke assembly and interlock pin.

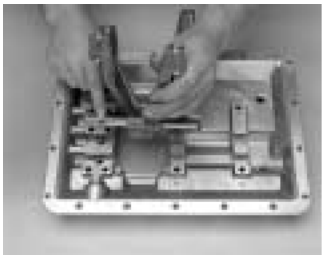

6. Remove 4th-5th yoke assembly.

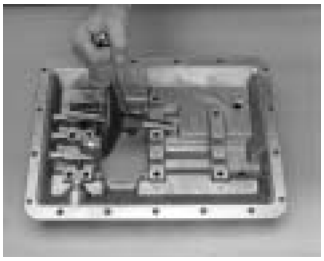

7. Inspect the yoke pad bushings. If the pads are worn, remove worn pad from shift yoke, install new pad and bend tabs over yoke top and bottom.

8. Inspect the yokes. If the yokes are damaged, remove by driving the roll pin through the yoke and rail.

9. Remove the interlock balls, detent balls, and springs.

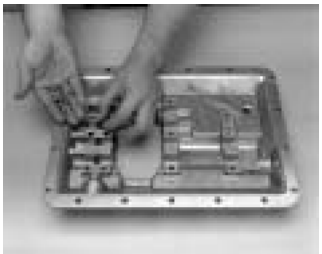

How to Assemble the FS-6205/6305 Shift Bar Housing

Special Instructions

Interlock balls, detent balls, and springs can be used interchangeably.

Lubricate yoke pads and inserts with oil before assembly.

Lubricate yoke bar grooves with grease before assembly.

Keep yoke bars in neutral while assembling.

The shift yoke retainer holes are not tapped on new shift bar housings. The capscrews that are used are "thread forming" and can be reused if the shift bar housing is replaced.

It may be necessary to support the yoke bars in position while installing the retainers.

Procedure -

1. Install interlock balls, detent balls and springs in the following sequence;
   A. Position (3) balls in the reverse light switch bore.
   B. Install 1st-reverse detent spring and ball.
   C. Position (2) balls in adjacent cross bore.
   D. Install 2nd-3rd detent spring and ball.
   E. Position (2) balls in adjacent cross bore
   F. Install 4th-5th detent spring and ball.

   Note: Balls and springs can be used interchangeably.

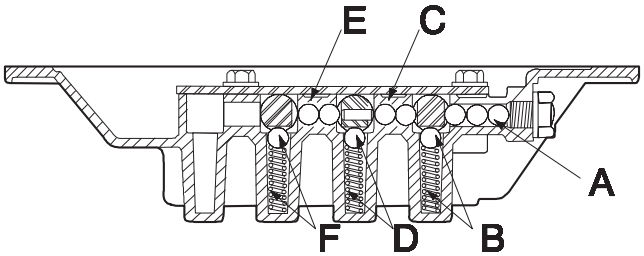

2. Position 1st-reverse yoke in housing assembly as shown.

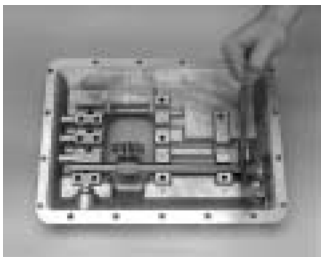

3. Install the interlock pin in 2nd-3rd yoke assembly.

4. Position 2nd-3rd yoke in housing assembly.

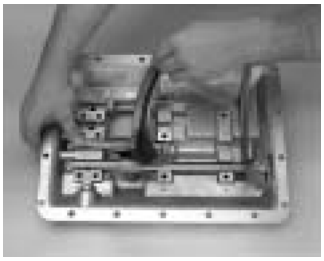

5. Position 4th-5th yoke in housing assembly.

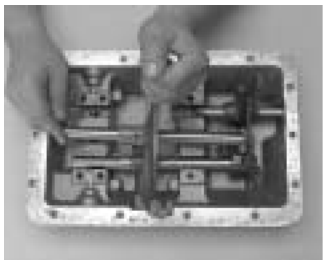

6. Position retainers, front retainer in rear set of holes.

NEED THESE PARTS? 226 Eaton Fuller FS-5406A parts, priced online >> Call 877-776-4600

Pro Gear and Transmission, Inc | www.progearandtransmission.com | www.pgttruckparts.com
906 West Gore St, Orlando, Fl, 32805 | +1 (877)-776-4600 | +1 (407)-872191 | parts@eprogear.com

7. Install the capscrews in the middle and rear retainer. Tighten all rail support capscrews to 20-25 lbs. ft. (27-34 N•m).

   Note: It may be necessary to support rails in proper position while installing rail supports.

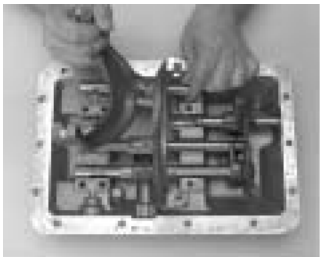

8. Carefully shift the 4th-5th yoke into 4th gear position (rearward).

9. Install the capscrews in front retainer. Tighten all rail support capscrews to 20-25 lbs. ft. (27-34 N•m).

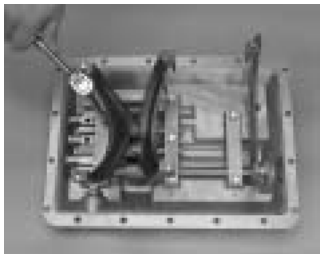

Final Check

Make sure interlocking system is working - can't shift into 2 gears at the same time.

NEED THESE PARTS? 226 Eaton Fuller FS-5406A parts, priced online >> Call 877-776-4600

Pro Gear and Transmission, Inc | www.progearandtransmission.com | www.pgttruckparts.com
906 West Gore St, Orlando, Fl, 32805 | +1 (877)-776-4600 | +1 (407)-872191 | parts@eprogear.com

How to Disassemble the FS-5306/6306/5406/6406 Shift Bar Housing

Special Instructions

The shift bar housing must be removed from the transmission.

During disassembly, lay all parts on a clean bench in order of removal to facilitate assembly.

Shift bars not being removed must be kept in the neutral position or the interlocking parts lock the bars.

Start with reverse yoke assembly.

When removing the interlock balls, detent balls, and springs, remove the interlock and detent balls before removing the springs.

Procedure -

1. With the housing rear to the right, lay the assembly on a flat surface.

2. In order to remove the front retaining capscrews, shift 5th-6th yoke assembly into 5th gear position (rearward).

3. Remove capscrews and retainers.

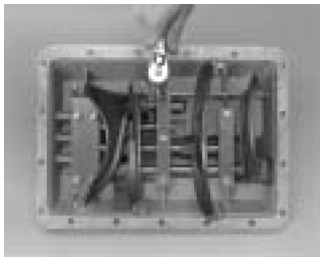

4. Remove reverse yoke assembly.

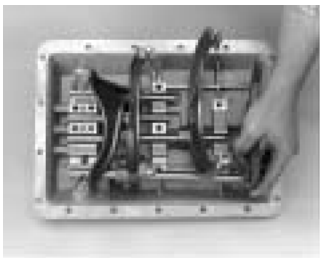

5. Remove 1st-2nd yoke assembly and interlock pin.

6. Remove 3rd-4th yoke assembly and interlock pin.

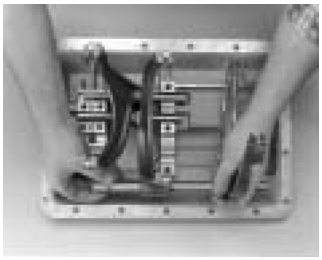

7. Remove 5th-6th yoke assembly.

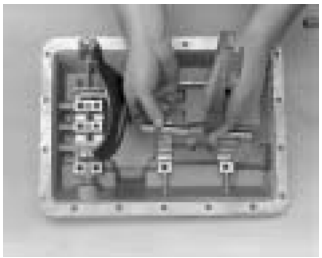

8. Inspect the yoke pad bushings. If the pads are worn, remove worn pad from shift yoke, install new pad and bend tabs over yoke top and bottom.

NEED THESE PARTS? 226 Eaton Fuller FS-5406A parts, priced online >> Call 877-776-4600

Pro Gear and Transmission, Inc | www.progearandtransmission.com | www.pgttruckparts.com
906 West Gore St, Orlando, Fl, 32805 | +1 (877)-776-4600 | +1 (407)-872191 | parts@eprogear.com

9. Inspect the yokes. If the yokes are damaged, remove by driving the roll pin through the yoke and rail.

10. Remove the interlock balls, detent balls, and springs.

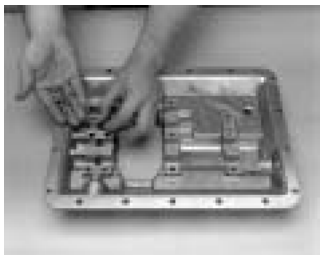

NEED THESE PARTS? 226 Eaton Fuller FS-5406A parts, priced online >> Call 877-776-4600

Pro Gear and Transmission, Inc | www.progearandtransmission.com | www.pgttruckparts.com
906 West Gore St, Orlando, Fl, 32805 | +1 (877)-776-4600 | +1 (407)-872191 | parts@eprogear.com

How to Assemble the FS-5306/6306/5406/6406 Shift Bar Housing

Special Instructions

Interlock balls, detent balls, and springs can be used interchangeably.

Lubricate yoke pads and inserts with oil before assembly.

Lubricate yoke bar grooves with grease before assembly.

Keep yoke bars in neutral while assembling.

The shift yoke retainer holes are not tapped on new shift bar housings. The capscrews that are used are "thread forming" and can be reused if the shift bar housing is replaced.

It may be necessary to support the yoke bars in position while installing the retainers.

Procedure -

1. Install interlock balls, detent balls and springs in the following sequence;
   A. Position (3) balls in the reverse light switch bore.
   B. Install reverse detent spring and ball.
   C. Position (2) balls in adjacent cross bore.
   D. Repeat steps B and C for 1st-2nd position, 3rd-4th position, and 5th-6th position.

   Note: Balls and springs can be used interchangeably.

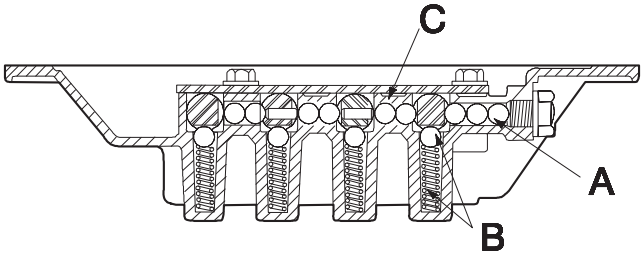

2. Position reverse yoke in housing assembly as shown.

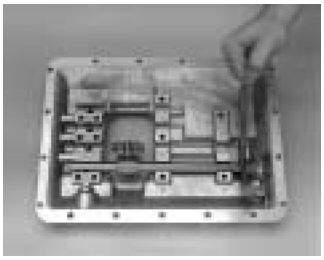

3. Install the interlock pin in 1st-2nd yoke assembly.

4. Position 1st-2nd yoke in housing assembly.

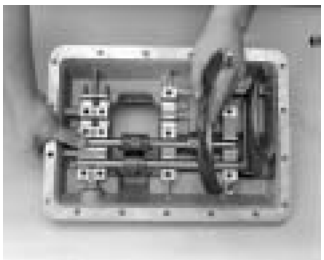

5. Install the interlock pin in 3rd-4th yoke assembly.

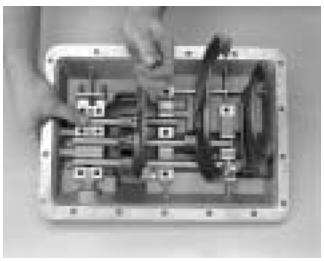

6. Position 3rd-4th yoke in housing assembly.

7. Position 5th-6th shift block in housing assembly.

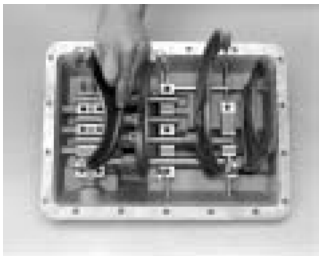

NEED THESE PARTS? 226 Eaton Fuller FS-5406A parts, priced online >> Call 877-776-4600

Pro Gear and Transmission, Inc | www.progearandtransmission.com | www.pgttruckparts.com
906 West Gore St, Orlando, Fl, 32805 | +1 (877)-776-4600 | +1 (407)-872191 | parts@eprogear.com

8. Position retainers, front retainer in rear set of holes.

9. Install the capscrews in the middle and rear retainers. Tighten all rail support capscrews to 20-25 lbs. ft. (27-34 N•m).

   Note: It may be necessary to support rails in proper position while installing rail supports.

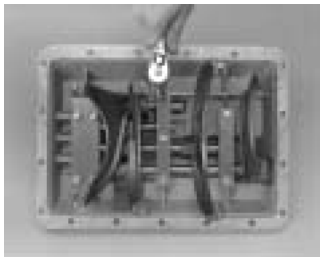

10. Carefully shift the 5th-6th yoke into 5th gear position (rearward).

11. Install the capscrews in front retainer. Tighten all rail support capscrews to 20-25 lbs. ft. (27-34 N•m).

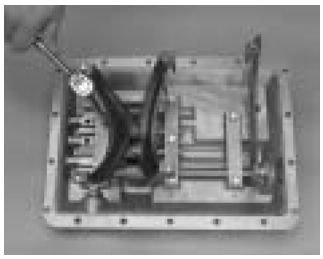

Final Check

Make sure interlocking system is working - can't shift into 2 gears at the same time.

NEED THESE PARTS? 226 Eaton Fuller FS-5406A parts, priced online >> Call 877-776-4600

Pro Gear and Transmission, Inc | www.progearandtransmission.com | www.pgttruckparts.com
906 West Gore St, Orlando, Fl, 32805 | +1 (877)-776-4600 | +1 (407)-872191 | parts@eprogear.com

How to Disassemble the FSO-6406/8406 Shift Bar Housing

Special Instructions

The shift bar housing must be removed from the transmission.

During disassembly, lay all parts on a clean bench in order of removal to facilitate assembly.

Shift bars not being removed must be kept in the neutral position or the interlocking parts lock the bars.

Start with 5th-6th yoke assembly.

When removing the interlock balls, detent balls, and springs, remove the interlock and detent balls before removing the springs.

Procedure -

1. With the housing rear to the right, lay the assembly on a flat surface.

2. Remove capscrews and retainers.

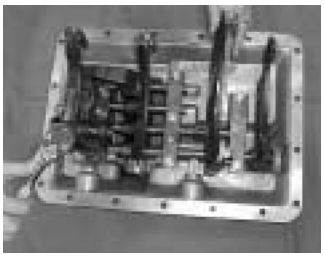

3. Remove 5th-6th yoke assembly.

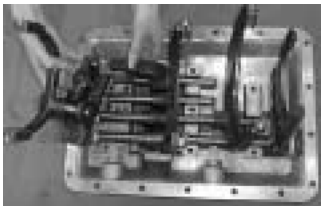

4. Remove 5th-6th shift block.

5. Remove 3rd-4th yoke assembly and interlock pin.

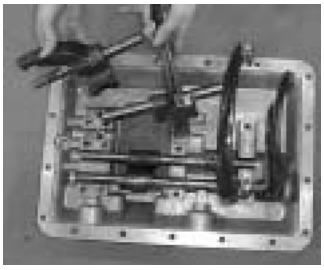

6. Remove 1st-2nd yoke assembly and interlock pin.

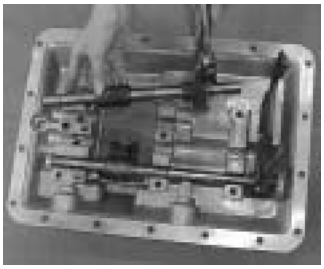

7. Remove reverse yoke assembly.

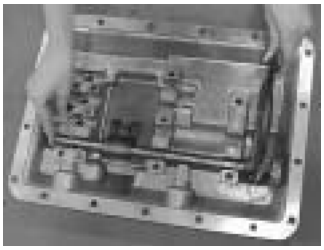

8. Inspect the yoke pad bushings. If the pads are worn, remove worn pad from shift yoke, install new pad and bend tabs over yoke top and bottom.

NEED THESE PARTS? 226 Eaton Fuller FS-5406A parts, priced online >> Call 877-776-4600

Pro Gear and Transmission, Inc | www.progearandtransmission.com | www.pgttruckparts.com
906 West Gore St, Orlando, Fl, 32805 | +1 (877)-776-4600 | +1 (407)-872191 | parts@eprogear.com

9. Inspect the yokes. If the yokes are damaged, remove by driving the roll pin through the yoke and rail.

10. Remove the interlock balls, detent balls, and springs.

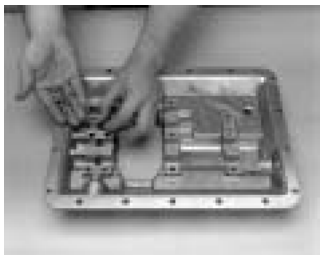

NEED THESE PARTS? 226 Eaton Fuller FS-5406A parts, priced online >> Call 877-776-4600

Pro Gear and Transmission, Inc | www.progearandtransmission.com | www.pgttruckparts.com
906 West Gore St, Orlando, Fl, 32805 | +1 (877)-776-4600 | +1 (407)-872191 | parts@eprogear.com

How to Assemble the FSO-6406/8406 Shift Bar Housing

Special Instructions

Interlock balls, detent balls, and springs can be used interchangeably.

Lubricate yoke pads and inserts with oil before assembly.

Lubricate yoke bar grooves with grease before assembly.

Keep yoke bars in neutral while assembling.

The shift yoke retainer holes are not tapped on new shift bar housings. The capscrews that are used are "thread forming" and can be reused if the shift bar housing is replaced.

It may be necessary to support the yoke bars in position while installing the retainers.

Procedure -

1. Install interlock balls, detent balls and springs in the following sequence;
   A. Position (3) balls in the reverse light switch bore.
   B. Install reverse detent spring and ball.
   C. Position (2) balls in adjacent cross bore.
   D. Repeat steps B and C for 1st-2nd position, 3rd-4th position, and 5th-6th position.

   Note: Balls and springs can be used interchangeably.

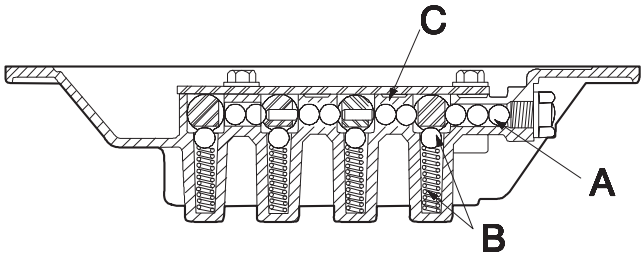

2. Position reverse yoke in housing assembly as shown.

3. Install the interlock pin in 1st-2nd yoke assembly.

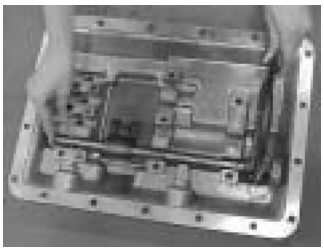

4. Position 1st-2nd yoke in housing assembly.

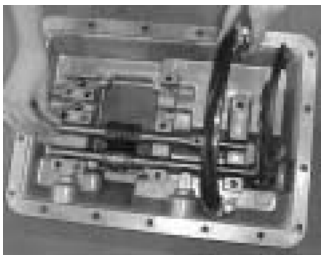

5. Install the interlock pin in 3rd-4th yoke assembly.

6. Position 3rd-4th yoke in housing assembly.

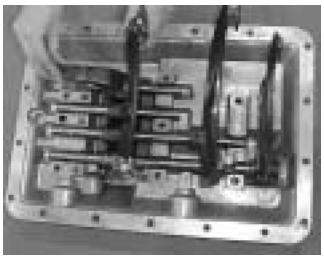

7. Position 5th-6th shift block in housing assembly.

NEED THESE PARTS? 226 Eaton Fuller FS-5406A parts, priced online >> Call 877-776-4600

Pro Gear and Transmission, Inc | www.progearandtransmission.com | www.pgttruckparts.com
906 West Gore St, Orlando, Fl, 32805 | +1 (877)-776-4600 | +1 (407)-872191 | parts@eprogear.com

8. Install the middle retainer capscrews.

   Note: It may be necessary to support rails in proper position while installing retainer.

9. Position 5th-6th yoke in housing assembly.

   Note: The 5th-6th yoke is aligned by the dowel pin and the capscrew hole shown in the picture.

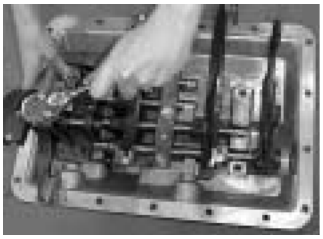

10. Position the last retainer and start the capscrews in the remaining capscrew holes.

11. Start with the capscrew shown in the picture and tighten all rail support capscrews to 20-25 lbs. ft. (27-34 N•m).

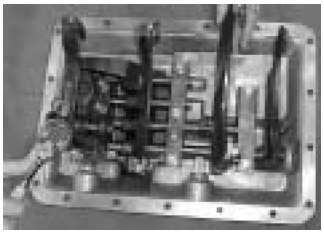

Final Check

Make sure interlocking system is working - can't shift into 2 gears at the same time.

NEED THESE PARTS? 226 Eaton Fuller FS-5406A parts, priced online >> Call 877-776-4600

Pro Gear and Transmission, Inc | www.progearandtransmission.com | www.pgttruckparts.com
906 West Gore St, Orlando, Fl, 32805 | +1 (877)-776-4600 | +1 (407)-872191 | parts@eprogear.com

How to Disassemble the Reverse Plunger on FS-4X05/5X05

Special Instructions

Retainer is under spring pressure.

Procedure -

1. Remove the reverse plunger retaining plug and gasket.

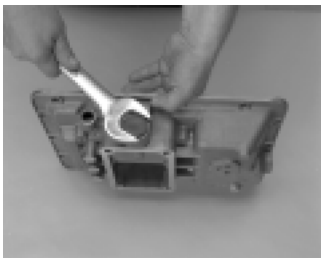

2. Remove the reverse plunger spring.

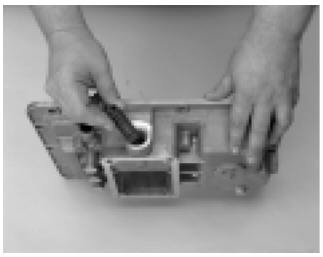

3. Remove the reverse plunger stop.

4. Remove the reverse plunger.

5. Inspect reverse plunger. Replace damaged parts.

NEED THESE PARTS? 226 Eaton Fuller FS-5406A parts, priced online >> Call 877-776-4600

Pro Gear and Transmission, Inc | www.progearandtransmission.com | www.pgttruckparts.com
906 West Gore St, Orlando, Fl, 32805 | +1 (877)-776-4600 | +1 (407)-872191 | parts@eprogear.com

How to Assemble the Reverse Plunger on FS-4X05/5X05

Special Instructions

With the reverse plunger bore up, place the shift bar housing on its side.

Procedure -

1. Install the reverse plunger.

2. Install the reverse plunger spring.

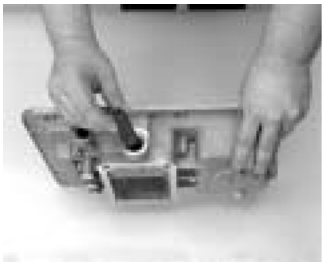

3. Install the reverse plunger stop.

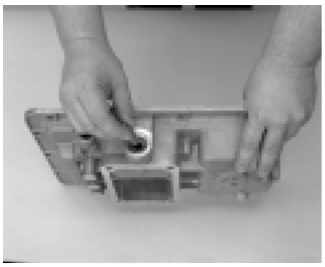

4. Install the reverse plunger gasket and plug.

5. Tighten the plug to 8-12 lbs. ft. (10.8-16.2 N•m) of torque.

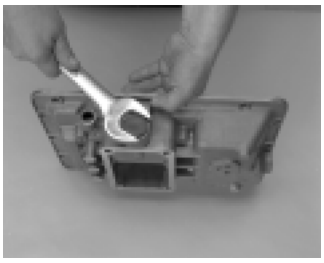

Final Check

Make sure snap ring is securely in shift block groove.

NEED THESE PARTS? 226 Eaton Fuller FS-5406A parts, priced online >> Call 877-776-4600

Pro Gear and Transmission, Inc | www.progearandtransmission.com | www.pgttruckparts.com
906 West Gore St, Orlando, Fl, 32805 | +1 (877)-776-4600 | +1 (407)-872191 | parts@eprogear.com

How to Disassemble the Reverse Plunger For All Models Except FS-4205/5205

Special Instructions

Snap ring and retainer are under spring pressure.

WARNING: Wear safety glasses when removing snap rings.

Procedure -

1. Depress reverse plunger springs and retainer.
2. Remove snap ring and spring retainer.

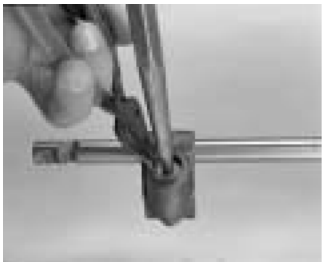

3. Remove the reverse plunger springs.

4. Remove washer and plunger.

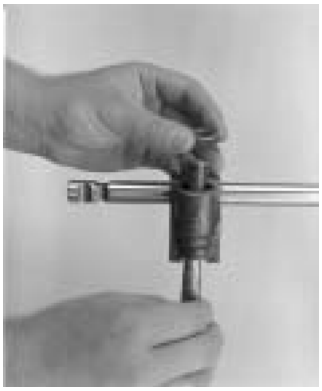

5. Inspect reverse plunger parts. Replace worn or damaged parts.

NEED THESE PARTS? 226 Eaton Fuller FS-5406A parts, priced online >> Call 877-776-4600

Pro Gear and Transmission, Inc | www.progearandtransmission.com | www.pgttruckparts.com
906 West Gore St, Orlando, Fl, 32805 | +1 (877)-776-4600 | +1 (407)-872191 | parts@eprogear.com

How to Assemble the Reverse Plunger For All Models Except FS-4205/5205

Special Instructions

Place the reverse yoke bar in a vise.

WARNING: Wear safety glasses when installing snap rings.

Special Tools

Vise with brass jaws or wood blocks

Snap ring pliers

Procedure -

1. Install plunger and washer.

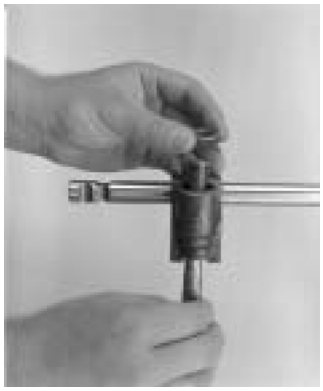

2. Install reverse plunger springs.

3. Depress the reverse plunger retainer and springs.
4. Install the snap ring in the shift block groove.

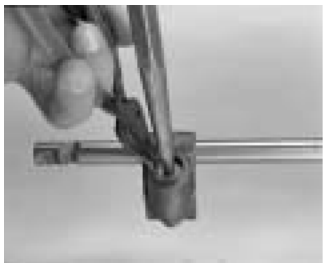

Final Check

Make sure snap ring is securely in shift block groove.

NEED THESE PARTS? 226 Eaton Fuller FS-5406A parts, priced online >> Call 877-776-4600

Pro Gear and Transmission, Inc | www.progearandtransmission.com | www.pgttruckparts.com
906 West Gore St, Orlando, Fl, 32805 | +1 (877)-776-4600 | +1 (407)-872191 | parts@eprogear.com

NEED THESE PARTS? 226 Eaton Fuller FS-5406A parts, priced online >> Call 877-776-4600

Pro Gear and Transmission, Inc | www.progearandtransmission.com | www.pgttruckparts.com
906 West Gore St, Orlando, Fl, 32805 | +1 (877)-776-4600 | +1 (407)-872191 | parts@eprogear.com

How to Remove the Input Shaft Assembly

Special Instructions

WARNING: Wear safety glasses when using a chisel to remove bearing cage.

Procedure -

1. Turn out six capscrews, jar front bearing cover with a rubber mallet and remove. If necessary remove oil seal from cover.

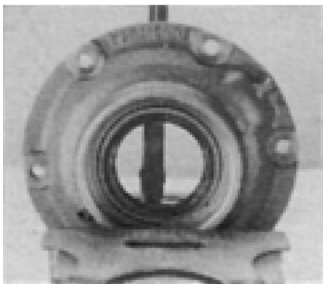

2. Remove input shaft assembly from transmission.

3. Using a chisel, remove bearing cage and rollers. Install bearing puller and remove bearing race from input shaft.

NEED THESE PARTS? 226 Eaton Fuller FS-5406A parts, priced online >> Call 877-776-4600

Pro Gear and Transmission, Inc | www.progearandtransmission.com | www.pgttruckparts.com
906 West Gore St, Orlando, Fl, 32805 | +1 (877)-776-4600 | +1 (407)-872191 | parts@eprogear.com

How to Remove the Mainshaft Assembly

Special Instructions

WARNING: Wear safety glasses when removing snap rings.

Special Tools

Sling and hoist

Procedure -

1. Remove the speedometer sleeve and driven gear.

2. Turn out four retaining nuts and lockwashers.

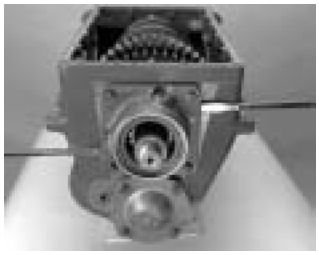

3. Using screwdrivers in notches, remove rear bearing cover. If necessary remove oil seal from cover.

4. Remove shims and speedometer drive gear or rotor.

   Note: Shims may come off with rear bearing cover.

5. For the FS-5205 model, tap on the mainshaft front to move the mainshaft rearward about 1/4". Use pry bars to remove the rear bearing cup and locating snap ring.

6. Wrap a sling around the 3rd-4th synchronizer assembly. Use a hoist to remove the mainshaft assembly from the case.

NEED THESE PARTS? 226 Eaton Fuller FS-5406A parts, priced online >> Call 877-776-4600

Pro Gear and Transmission, Inc | www.progearandtransmission.com | www.pgttruckparts.com
906 West Gore St, Orlando, Fl, 32805 | +1 (877)-776-4600 | +1 (407)-872191 | parts@eprogear.com

How to Remove the Countershaft Assembly

Procedure -

1. Turn out capscrews, remove countershaft rear bearing cover and shims.

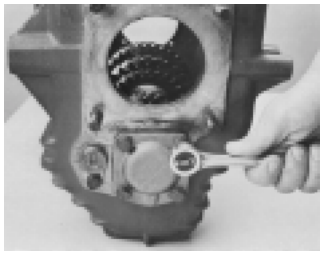

2. Remove the countershaft rear bearing cup.

   Note: Countershaft may slide to the rear and out of bearing bore.

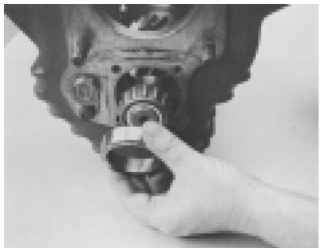

3. Move countershaft assembly to the rear and lift it from the case.

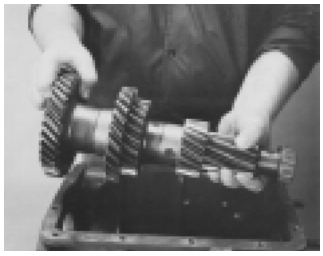

4. If countershaft front bearing race is to be replaced, drive bore plug through front of transmission and drive the race to the rear toward the inside of the case.

NEED THESE PARTS? 226 Eaton Fuller FS-5406A parts, priced online >> Call 877-776-4600

Pro Gear and Transmission, Inc | www.progearandtransmission.com | www.pgttruckparts.com
906 West Gore St, Orlando, Fl, 32805 | +1 (877)-776-4600 | +1 (407)-872191 | parts@eprogear.com

How to Remove the Reverse Idler Gear Assembly For All Models Except FS-5306/6306

Special Tools

Rolling wedge bar

Procedure -

1. Remove the reverse idler lock and retaining capscrew.

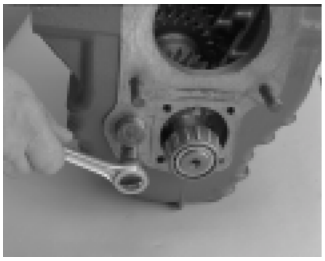

2. Using a rolling wedge bar, remove reverse idler shaft.

3. Remove reverse idler, bearings, spacer and thrust washers.

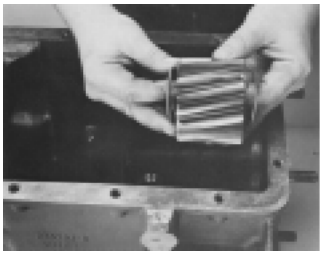

NEED THESE PARTS? 226 Eaton Fuller FS-5406A parts, priced online >> Call 877-776-4600

Pro Gear and Transmission, Inc | www.progearandtransmission.com | www.pgttruckparts.com
906 West Gore St, Orlando, Fl, 32805 | +1 (877)-776-4600 | +1 (407)-872191 | parts@eprogear.com

How to Remove the FS-5306/6306 Reverse Idler Gear Assembly

Special Tools

Sliding hammer

Procedure -

1. Use the slide hammer and remove reverse idler shaft.

2. Remove the locating ball.

3. Remove reverse idler assembly and thrust washers.

4. From the reverse idler assembly, remove the bearings and spacer.

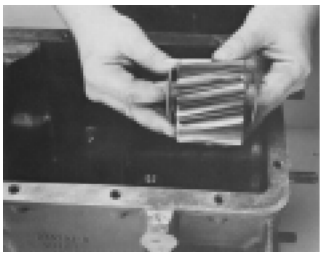

NEED THESE PARTS? 226 Eaton Fuller FS-5406A parts, priced online >> Call 877-776-4600

Pro Gear and Transmission, Inc | www.progearandtransmission.com | www.pgttruckparts.com
906 West Gore St, Orlando, Fl, 32805 | +1 (877)-776-4600 | +1 (407)-872191 | parts@eprogear.com

NEED THESE PARTS? 226 Eaton Fuller FS-5406A parts, priced online >> Call 877-776-4600

Pro Gear and Transmission, Inc | www.progearandtransmission.com | www.pgttruckparts.com
906 West Gore St, Orlando, Fl, 32805 | +1 (877)-776-4600 | +1 (407)-872191 | parts@eprogear.com

How to Disassemble the FS-4205 Mainshaft Assembly

Special Instructions

During disassembly, lay all parts on a clean bench in order of removal to facilitate reassembly.

WARNING: Wear safety glasses when removing snap rings.

Special Tools

Vise with brass jaws or wood blocks

Snap ring pliers

Gear puller

Procedure - See Mainshaft FRONT Facing Up illustration

1. With mainshaft front facing up, install the mainshaft assembly vertically in a vise.
2. Remove shift hub thrust bearing and bearing race.
3. Remove 4th-5th speed synchronizer and cups.
4. Remove 4th-5th clutch hub.
5. Remove 4th gear and 4th gear bearing.
6. Remove 3rd gear retaining snap ring.
7. Remove 3rd gear thrust washer and locating ball.
8. Remove 3rd gear and 3rd gear bearing.
9. Remove 2nd-3rd speed synchronizer and cups.
10. Remove snap ring and 2nd-3rd shift hub.
11. Remove 2nd gear and 2nd gear bearing.
12. Remove split ring retainer ring.
13. Separate split washers and remove half rings and locating ball.
14. Remove 1st gear and 1st gear bearing.
15. Remove 1st-reverse clutch hub.

Procedure - See Mainshaft REAR Facing Up illustration

16. With mainshaft rear facing up, install the mainshaft assembly vertically in a vise.
17. Using a puller, remove reverse gear, washer, and rear bearing.
18. Remove reverse gear bearing.

NEED THESE PARTS? 226 Eaton Fuller FS-5406A parts, priced online >> Call 877-776-4600

Pro Gear and Transmission, Inc | www.progearandtransmission.com | www.pgttruckparts.com
906 West Gore St, Orlando, Fl, 32805 | +1 (877)-776-4600 | +1 (407)-872191 | parts@eprogear.com

Mainshaft FRONT Facing Up

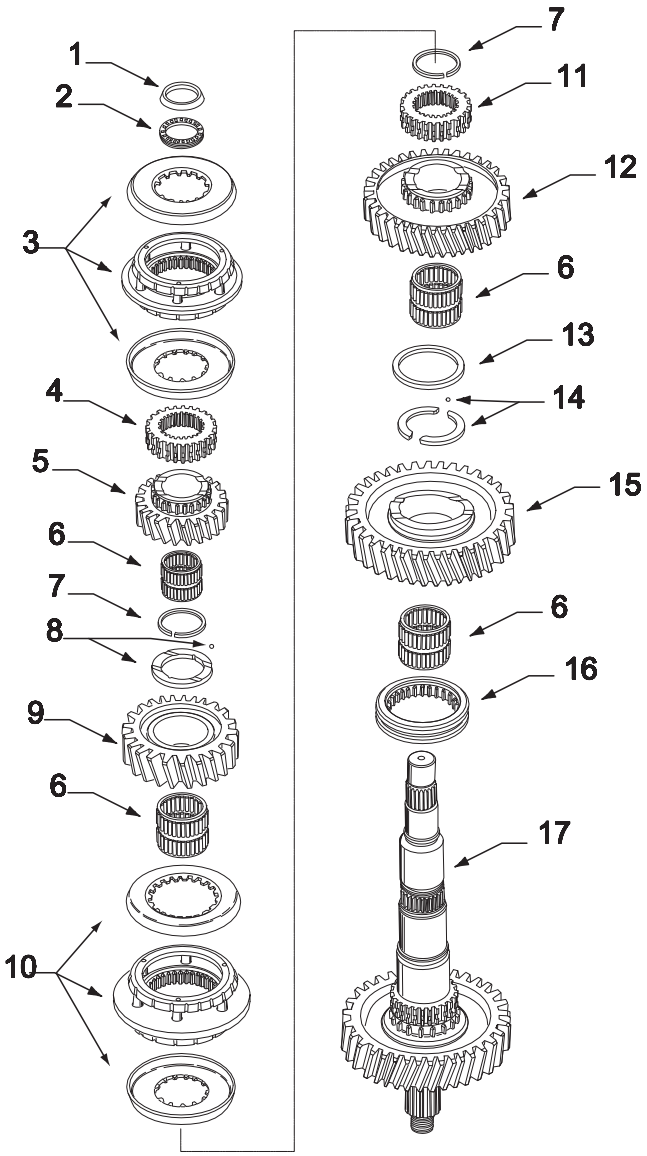

1. Bearing Race
2. Thrust Bearing
3. 4th-5th Speed Synchronizer and Cups
4. 4th-5th Clutch Hub
5. 4th Gear
6. Gear Bearing
7. Snap Ring
8. Thrust Washer and Locating Ball
9. 3rd Gear
10. 2nd-3rd Speed Synchronizer and Cups
11. 2nd-3rd Clutch Hub
12. 2nd Gear
13. Split Ring Retainer Ring
14. Split Washers and Locating Ball
15. 1st Gear
16. 1st-Reverse Clutch Hub
17. Mainshaft

Mainshaft REAR Facing Up

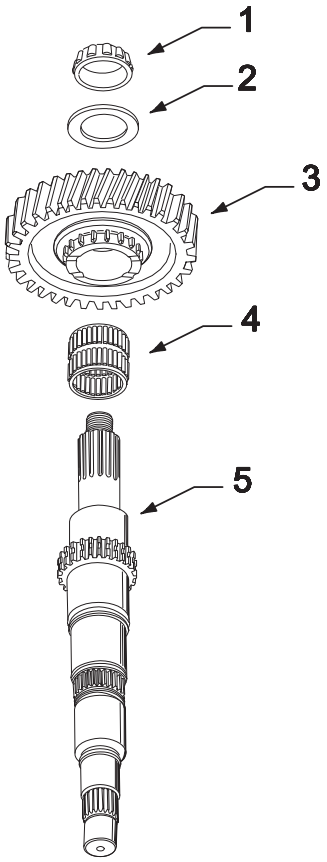

1. Rear Bearing
2. Washer
3. Reverse Gear
4. Gear Bearing
5. Mainshaft

NEED THESE PARTS? 226 Eaton Fuller FS-5406A parts, priced online >> Call 877-776-4600

Pro Gear and Transmission, Inc | www.progearandtransmission.com | www.pgttruckparts.com
906 West Gore St, Orlando, Fl, 32805 | +1 (877)-776-4600 | +1 (407)-872191 | parts@eprogear.com

How to Assemble the FS-4205 Mainshaft Assembly

Special Instructions

Lubricate the gear bearing bores, gear hub faces, split washers, synchronizer friction surfaces, synchronizer cups and the mainshaft with transmission lube as the mainshaft is assembled.

WARNING: Wear safety glasses when installing snap rings.

Special Tools

Vise with brass jaws or wood blocks

Sleeve type bearing driver

Snap ring pliers

Procedure - See Mainshaft REAR Facing Up illustration

1. With mainshaft rear facing up, install the mainshaft assembly vertically in a vise.
2. Install reverse gear bearing.
3. With reverse gear clutching teeth down, install reverse gear.
4. Install reverse gear washer. Washer can be installed either way.
5. Use a sleeve type bearing driver and install the rear mainshaft bearing.

Procedure - See Mainshaft FRONT Facing Up illustration

6. With mainshaft front facing up, install the mainshaft assembly vertically in a vise.
7. Install the 1st-reverse clutch hub.
8. Install 1st gear bearing.
9. With 1st gear clutching teeth down, install 1st gear.
10. Install locating ball and split washer in mainshaft groove, position split washer ends together at locating ball.
11. Install retainer ring over split washer.
12. Install 2nd gear bearing.
13. With 2nd gear clutching teeth up, install 2nd gear.
14. With 2nd-3rd clutch hub stepped face up, install 2nd-3rd clutch hub.
15. Install snap ring in mainshaft groove.
16. Install 2nd-3rd speed synchronizer and cups.
17. Install 3rd gear bearing.
18. With 3rd gear clutching teeth down, install 3rd gear.
19. Install locating ball and washer. Washer can be installed either way.
20. Install snap ring in mainshaft groove.
21. Install 4th gear bearing.
22. With 4th gear clutching teeth up, install 4th gear.
23. With 4th-5th clutch hub machined surface up, install 4th-5th clutch hub.
24. Install 4th-5th speed synchronizer and cups.
25. Install the shift hub thrust bearing and bearing race.

Final Check

Make sure the mainshaft gears rotate freely.

NEED THESE PARTS? 226 Eaton Fuller FS-5406A parts, priced online >> Call 877-776-4600

Mainshaft REAR Facing Up

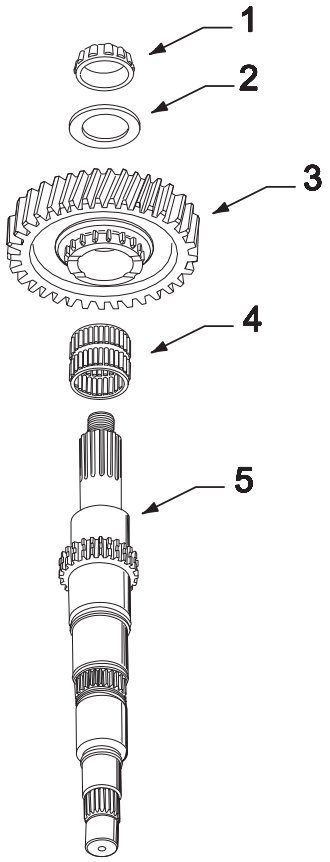

1. Rear Bearing
2. Washer
3. Reverse Gear
4. Gear Bearing
5. Mainshaft

Mainshaft FRONT Facing Up

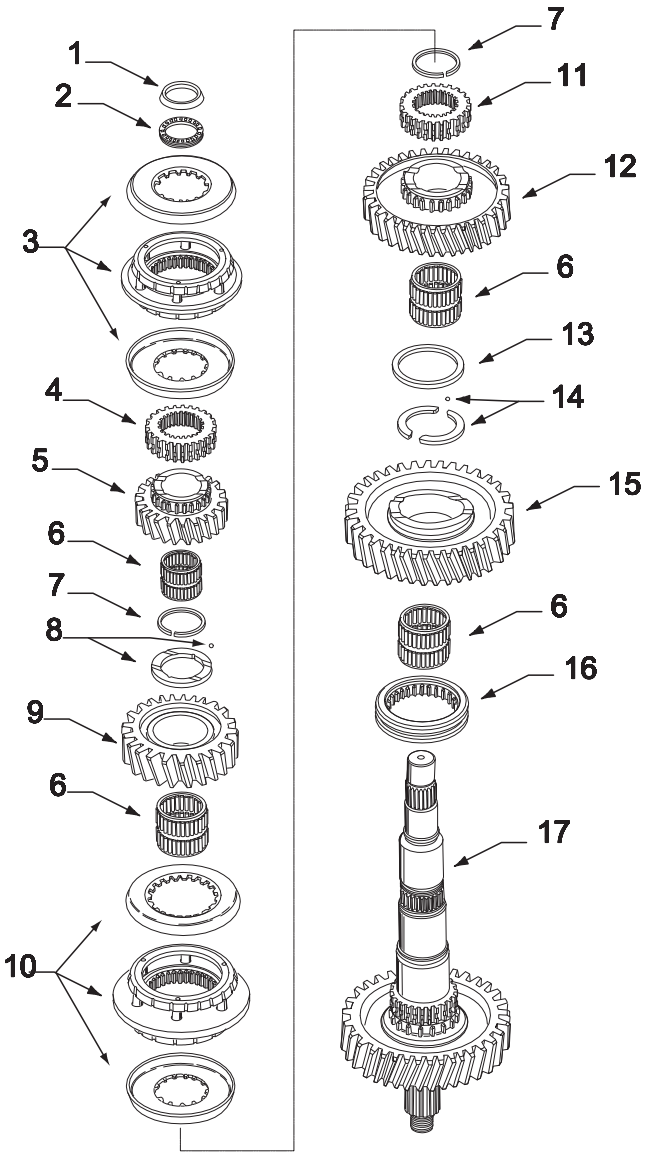

1. Bearing Race
2. Thrust Bearing
3. 4th-5th Speed Synchronizer and Cups
4. 4th-5th Clutch Hub
5. 4th Gear
6. Gear Bearing
7. Snap Ring
8. Thrust Washer and Locating Ball
9. 3rd Gear
10. 2nd-3rd Speed Synchronizer and Cups
11. 2nd-3rd Clutch Hub
12. 2nd Gear
13. Split Ring Retainer Ring
14. Split Washers and Locating Ball
15. 1st Gear
16. 1st-Reverse Clutch Hub
17. Mainshaft

NEED THESE PARTS? 226 Eaton Fuller FS-5406A parts, priced online >> Call 877-776-4600

Pro Gear and Transmission, Inc | www.progearandtransmission.com | www.pgttruckparts.com
906 West Gore St, Orlando, Fl, 32805 | +1 (877)-776-4600 | +1 (407)-872191 | parts@eprogear.com

How to Disassemble the FS-5205 Mainshaft Assembly

Special Instructions

During disassembly, lay all parts on a clean bench in order of removal to facilitate reassembly.

Use caution when removing 1st gear, the needle bearings are loose under 1st gear.

WARNING: Wear safety glasses when removing snap rings.

Special Tools

Vise with brass jaws or wood blocks

Snap ring pliers

Bearing puller

Procedure - See Mainshaft FRONT Facing Up illustration

1. With mainshaft front facing up, install the mainshaft assembly vertically in a vise.
2. Remove 4th~5th speed synchronizer and cups.
3. Remove shift hub thrust bearing and bearing race.
4. Remove 4th-5th clutch hub.
5. Remove 4th gear and 4th gear bearing.
6. Remove 3rd gear retaining snap ring.
7. Remove 3rd gear thrust washer and locating ball.
8. Remove 3rd gear and 3rd gear bearing.
9. Remove 2nd-3rd speed synchronizer and cups.

Procedure - See Mainshaft REAR Facing Up illustration

10. With mainshaft rear facing up, install the mainshaft assembly vertically in a vise.
11. Using a puller, remove mainshaft rear bearing.
12. Remove 1st gear split washer retaining ring.
13. Separate split washers and remove half rings.
14. Remove 1st gear and 1st gear bearing.
15. Remove 1st-reverse sliding clutch.
16. Remove 1st-reverse clutch hub snap ring.
17. Remove shift hub.
18. Remove reverse gear and reverse gear bearing.
19. Remove 2nd gear split washer retaining ring.
20. Remove 2nd gear split washer and locating ball.
21. Remove 2nd gear and 2nd gear bearing.

NEED THESE PARTS? 226 Eaton Fuller FS-5406A parts, priced online >> Call 877-776-4600

Pro Gear and Transmission, Inc | www.progearandtransmission.com | www.pgttruckparts.com
906 West Gore St, Orlando, Fl, 32805 | +1 (877)-776-4600 | +1 (407)-872191 | parts@eprogear.com

Mainshaft FRONT Facing Up

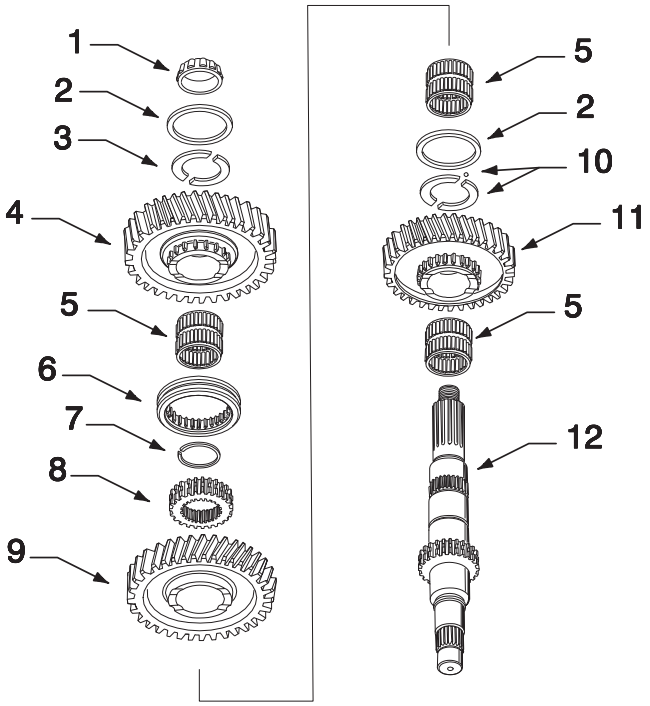

1. Rear Bearing
2. Washer Retainer Ring
3. Split Washers
4. 1st Gear
5. Gear Bearing
6. 1st-Reverse Sliding Clutch
7. Snap Ring
8. Shift Hub
9. Reverse Gear
10. Split Washers and Locating Ball
11. 2nd Gear
12. Mainshaft

Mainshaft REAR Facing Up

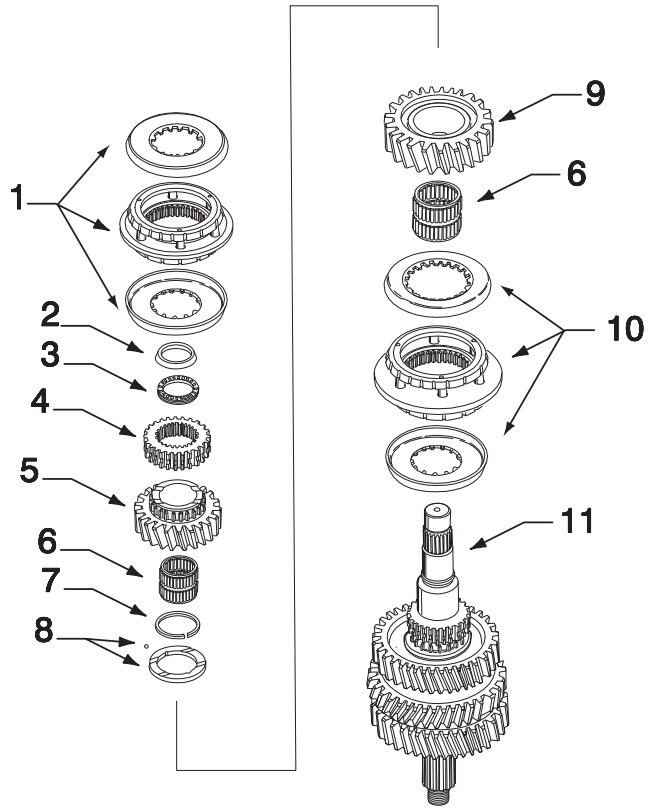

1. 4th-5th Speed Synchronizer and Cups
2. Bearing Race
3. Thrust Bearing
4. 4th-5th Clutch Hub
5. 4th Gear
6. Gear Bearing
7. Snap Ring
8. Thrust Washer and Locating Ball
9. 3rd Gear
10. 2nd-3rd Speed Synchronizer and Cups
11. Mainshaft

NEED THESE PARTS? 226 Eaton Fuller FS-5406A parts, priced online >> Call 877-776-4600

Pro Gear and Transmission, Inc | www.progearandtransmission.com | www.pgttruckparts.com
906 West Gore St, Orlando, Fl, 32805 | +1 (877)-776-4600 | +1 (407)-872191 | parts@eprogear.com

How to Assemble the FS-5205 Mainshaft Assembly

Special Instructions

Lubricate the gear bearing bores, gear hub faces, split washers, synchronizer friction surfaces, synchronizer cups and the mainshaft with transmission lube as the mainshaft is assembled.

WARNING: Wear safety glasses when installing snap rings.

Special Tools

Vise with brass jaws or wood blocks

Sleeve type bearing driver

Snap ring pliers

Procedure - See Mainshaft REAR Facing Up illustration

1. With mainshaft rear facing up, install the mainshaft assembly vertically in a vise.
2. Install 2nd gear bearing.
3. With 2nd gear clutching teeth down, install 2nd gear.
4. Install locating ball and split washer in mainshaft groove, position split washer ends together at locating ball.
5. Install 2nd gear split washer retaining ring.
6. Install reverse gear bearing.
7. Install reverse gear.
8. Install 1st-reverse clutch hub.
9. Install 1st-reverse clutch hub snap ring in mainshaft groove.
10. Install 1st-reverse sliding clutch.
11. Install 1st gear bearing.
12. Install 1st gear.
13. Install 1st gear split washer in mainshaft groove, position split washer ends together.
14. Install retainer ring over split washer.
15. Use a sleeve type bearing driver and install the rear mainshaft bearing.

Procedure - See Mainshaft FRONT Facing Up illustration

16. With mainshaft front facing up, install the mainshaft assembly vertically in a vise.
17. Install 2nd-3rd speed synchronizer and cups.
18. Install 3rd gear bearing.
19. With 3rd gear clutching teeth down, install 3rd gear.
20. Install locating ball and 3rd gear thrust washer. Align washer indent with ball.
21. Install snap ring in mainshaft groove.
22. Install 4th gear bearing.
23. With 4th gear clutching teeth up, install 4th gear.
24. With 4th-5th clutch hub machined surface up, install 4th-5th clutch hub.
25. Install the clutch hub thrust bearing and bearing race.
26. Install 4th-5th speed synchronizer and cups.

Final Check

Make sure the mainshaft gears rotate freely.

Mainshaft REAR Facing Up

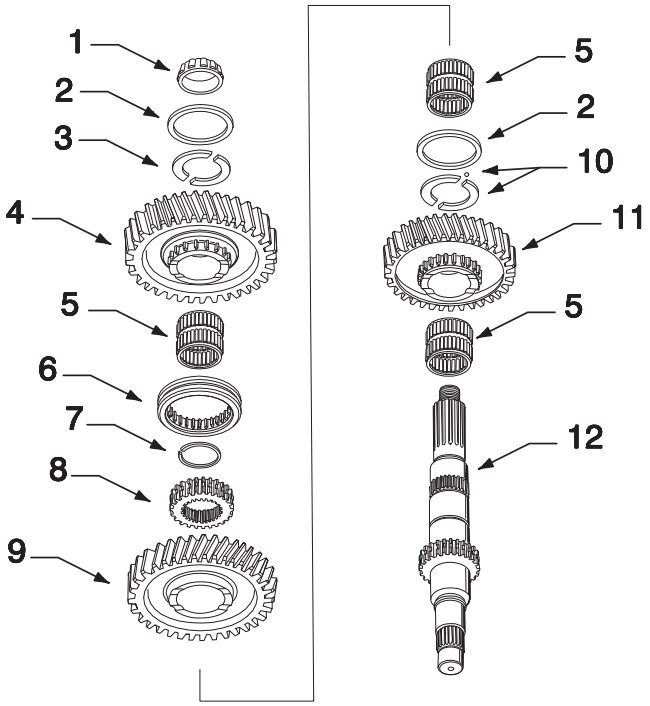

1. Rear Bearing
2. Washer Retainer Ring
3. Split Washers
4. 1st Gear
5. Gear Bearing
6. 1st-Reverse Sliding Clutch
7. Snap Ring
8. Shift Hub
9. Reverse Gear
10. Split Washers and Locating Ball
11. 2nd Gear
12. Mainshaft

Mainshaft FRONT Facing Up

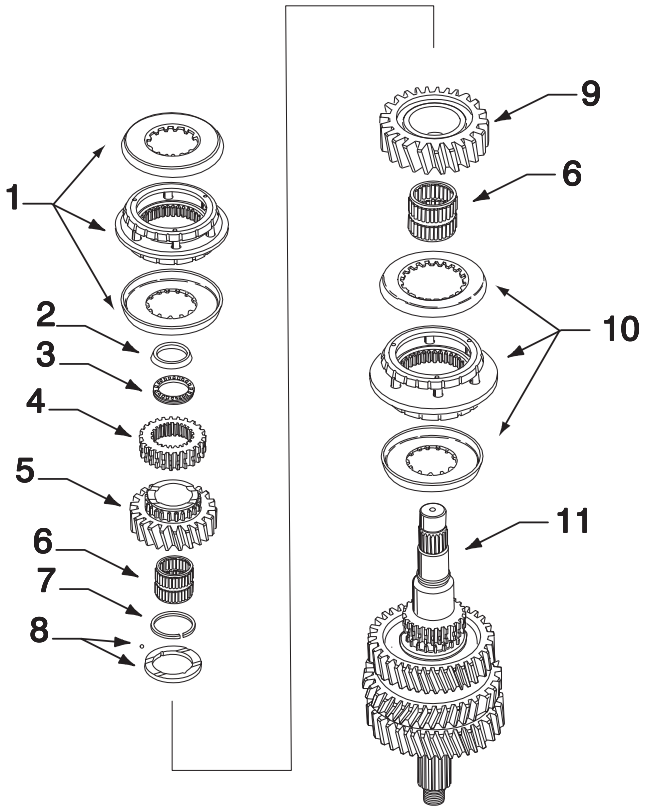

1. 4th-5th Speed Synchronizer and Cups
2. Bearing Race
3. Thrust Bearing
4. 4th-5th Clutch Hub
5. 4th Gear
6. Gear Bearing
7. Snap Ring
8. Thrust Washer and Locating Ball
9. 3rd Gear
10. 2nd-3rd Speed Synchronizer and Cups
11. Mainshaft

NEED THESE PARTS? 226 Eaton Fuller FS-5406A parts, priced online >> Call 877-776-4600

Pro Gear and Transmission, Inc | www.progearandtransmission.com | www.pgttruckparts.com
906 West Gore St, Orlando, Fl, 32805 | +1 (877)-776-4600 | +1 (407)-872191 | parts@eprogear.com

How to Disassemble the FS-6205 Mainshaft Assembly

Special Instructions

During disassembly, lay all parts on a clean bench in order of removal to facilitate reassembly.

WARNING: Wear safety glasses when removing snap rings.

Special Tools

Vise with brass jaws or wood blocks

Snap ring pliers

Bearing puller

Procedure - See Mainshaft FRONT Facing Up illustration

1. With mainshaft front facing up, install the mainshaft assembly vertically in a vise.
2. Remove 4th-5th speed synchronizer and cups.
3. Using a puller mounted behind 4th-5th clutch hub, remove hub and bearing.
4. Remove 4th gear, bearings, and spacer.
5. Remove snap ring, thrust washer, and locating ball.
6. Remove 3rd gear, bearings, and spacer.
7. Remove 2nd-3rd speed synchronizer and cups.
8. Remove snap ring and 2nd-3rd shift hub.
9. Remove 2nd gear, bearings and spacer.
10. Remove snap ring, thrust washer, and locating ball.
11. Remove 1st gear, bearings, and spacer.
12. Remove sliding clutch.

Procedure - See Mainshaft REAR Facing Up illustration

13. With mainshaft rear facing up, install the mainshaft assembly vertically in a vise.
14. Using a puller, remove reverse gear, washer, and rear bearing.
15. Remove reverse gear bearings and spacer.

NEED THESE PARTS? 226 Eaton Fuller FS-5406A parts, priced online >> Call 877-776-4600

Pro Gear and Transmission, Inc | www.progearandtransmission.com | www.pgttruckparts.com
906 West Gore St, Orlando, Fl, 32805 | +1 (877)-776-4600 | +1 (407)-872191 | parts@eprogear.com

Mainshaft FRONT Facing Up

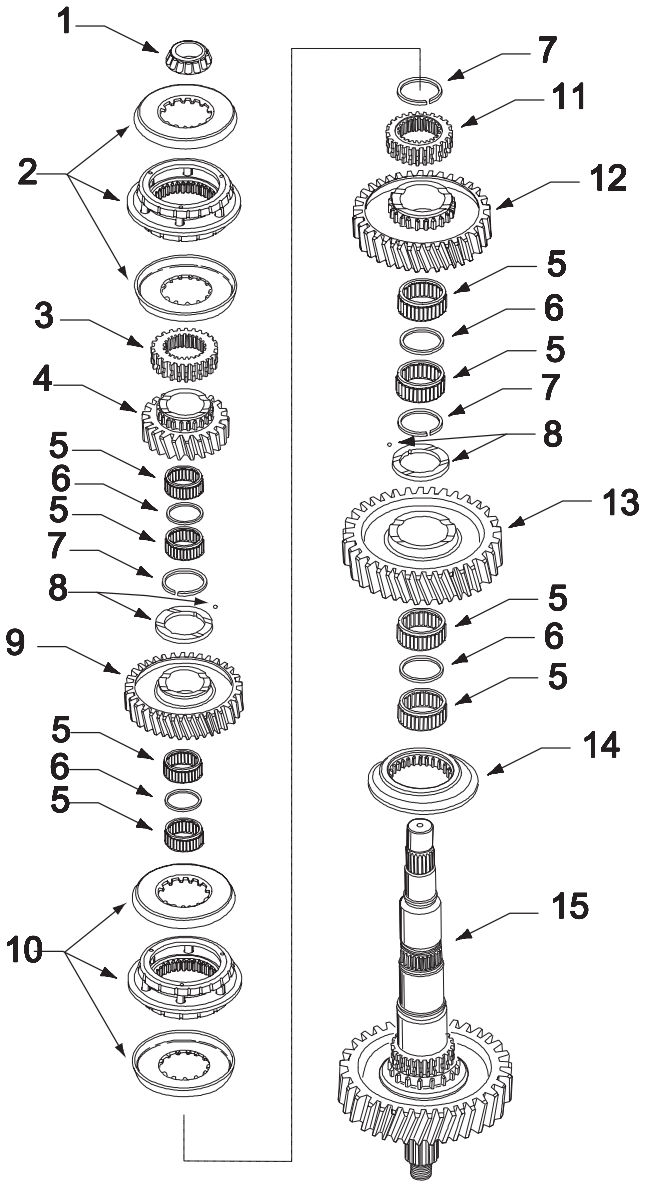

1. Front Bearing
2. 4th-5th Speed Synchronizer and Cups
3. 4th-5th Clutch Hub
4. 4th Gear
5. Gear Bearing
6. Spacer
7. Snap Ring
8. Thrust Washer and Locating Ball
9. 3rd Gear
10. 2nd-3rd Speed Synchronizer and Cups
11. 2nd-3rd Clutch Hub
12. 2nd Gear
13. 1st Gear
14. Sliding Clutch
15. Mainshaft

Mainshaft REAR Facing Up

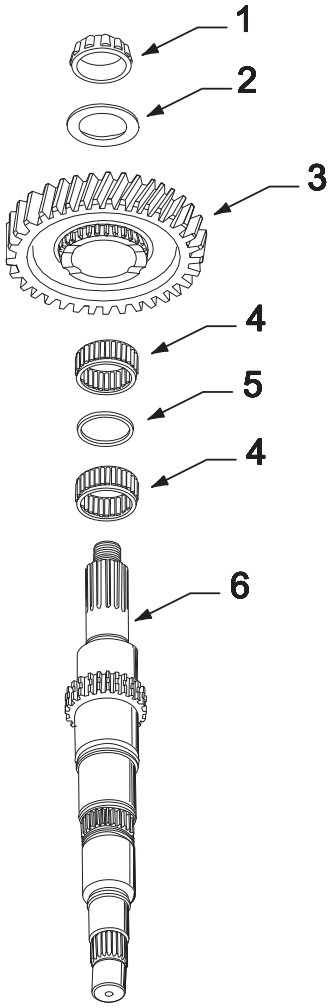

1. Rear Bearing
2. Washer
3. Reverse Gear
4. Gear Bearing
5. Spacer
6. Mainshaft

NEED THESE PARTS? 226 Eaton Fuller FS-5406A parts, priced online >> Call 877-776-4600

Pro Gear and Transmission, Inc | www.progearandtransmission.com | www.pgttruckparts.com
906 West Gore St, Orlando, Fl, 32805 | +1 (877)-776-4600 | +1 (407)-872191 | parts@eprogear.com

How to Assemble the FS-6205 Mainshaft Assembly

Special Instructions

CAUTION: Do not heat the bearing above 275°F (136°C). If possible, use a heat lamp as the source.

Lubricate the gear bearing bores, gear hub faces, split washers, synchronizer friction surfaces, synchronizer cups and the mainshaft with transmission lube as the mainshaft is assembled.

WARNING: Wear safety glasses when installing snap rings.

Special Tools

Vise with brass jaws or wood blocks
Sleeve type bearing driver
Snap ring pliers

Procedure - See Mainshaft REAR Facing Up illustration

1. With mainshaft rear facing up, install the mainshaft assembly vertically in a vise.
2. Install reverse gear bearings with spacer between bearings.
3. With reverse gear clutching teeth down, install reverse gear.
4. Install reverse gear washer. Washer can be installed either way.
5. Use a sleeve type bearing driver or heat lamp and install the rear mainshaft bearing.

Procedure - See Mainshaft FRONT Facing Up illustration

6. With mainshaft front facing up, install the mainshaft assembly vertically in a vise.
7. Install the sliding clutch.
8. Install 1st gear bearings with spacer between the bearings.
9. With 1st gear clutching teeth down, install 1st gear.
10. Install locating ball and washer in mainshaft groove. Washer can be installed either way.
11. Install snap ring in mainshaft groove.
12. Install 2nd gear bearings with spacer between bearings.
13. With 2nd gear clutching teeth up, install 2nd gear.
14. With 2nd-3rd clutch hub stepped face up, install 2nd-3rd clutch hub.
15. Install snap ring in mainshaft groove.
16. Install 2nd-3rd speed synchronizer and cups.
17. Install 3rd gear bearings with spacer between bearings.
18. With 3rd gear clutching teeth down, install 3rd gear.
19. Install locating ball and washer. Washer can be installed either way.
20. Install snap ring in mainshaft groove.
21. Install 4th gear bearings with spacer between bearings.
22. With 4th gear clutching teeth up, install 4th gear.
23. With 4th-5th clutch hub shoulder end facing down, install 4th-5th clutch hub.
24. Install 4th-5th speed synchronizer and cups.
25. Use a sleeve type driver and install the front mainshaft bearing.

Final Check

Make sure the mainshaft gears rotate freely.

Pro Gear and Transmission, Inc | www.progearandtransmission.com | www.pgttruckparts.com
906 West Gore St, Orlando, Fl, 32805 | +1 (877)-776-4600 | +1 (407)-872191 | parts@eprogear.com

Mainshaft REAR Facing Up

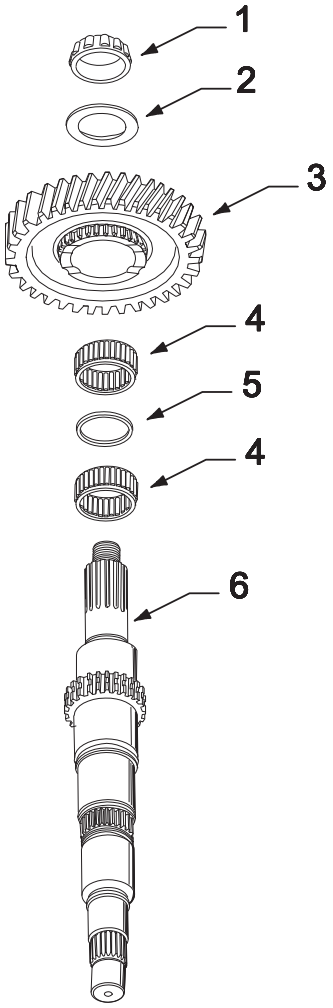

1. Rear Bearing
2. Washer
3. Reverse Gear
4. Gear Bearing
5. Spacer
6. Mainshaft

Mainshaft FRONT Facing Up

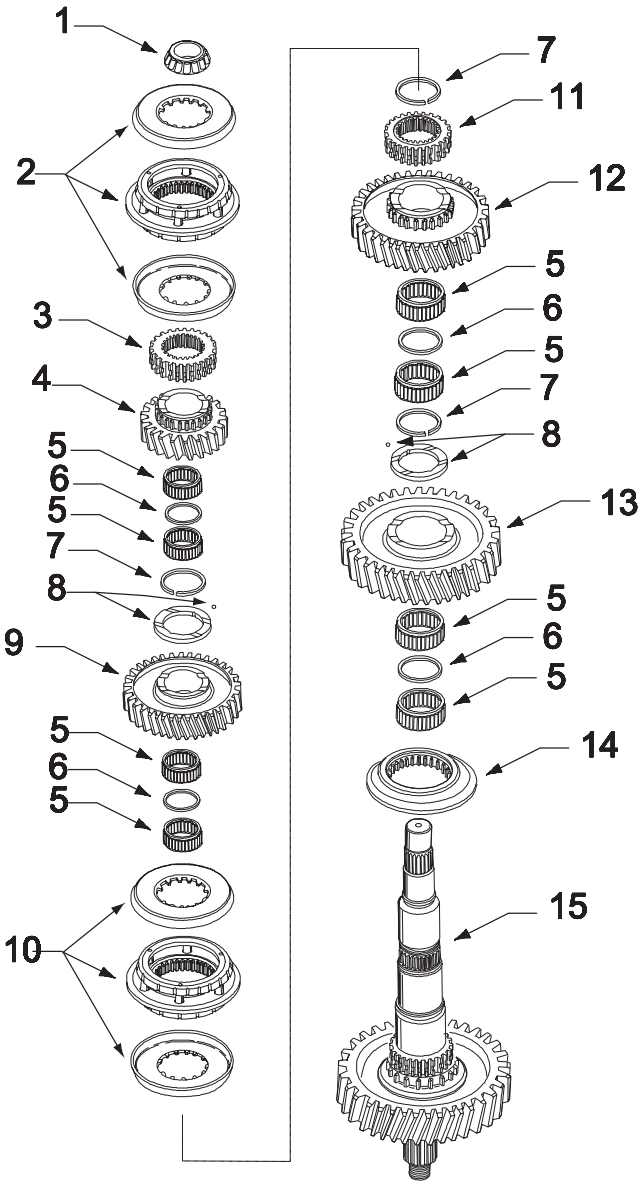

1. Front Bearing
2. 4th-5th Speed Synchronizer and Cups
3. 4th-5th Clutch Hub
4. 4th Gear
5. Gear Bearing
6. Spacer
7. Snap Ring
8. Thrust Washer and Locating Ball
9. 3rd Gear
10. 2nd-3rd Speed Synchronizer and Cups
11. 2nd-3rd Clutch Hub
12. 2nd Gear
13. 1st Gear
14. Sliding Clutch
15. Mainshaft

NEED THESE PARTS? 226 Eaton Fuller FS-5406A parts, priced online >> Call 877-776-4600

Pro Gear and Transmission, Inc | www.progearandtransmission.com | www.pgttruckparts.com
906 West Gore St, Orlando, Fl, 32805 | +1 (877)-776-4600 | +1 (407)-872191 | parts@eprogear.com

How to Disassemble the FS-6305 Mainshaft Assembly

Special Instructions

During disassembly, lay all parts on a clean bench in order of removal to facilitate reassembly.

WARNING: Wear safety glasses when removing snap rings.

Special Tools

Vise with brass jaws or wood blocks

Snap ring pliers

Bearing puller

Procedure - See Mainshaft FRONT Facing Up illustration

1. With mainshaft front facing up, install the mainshaft assembly vertically in a vise.
2. Remove 4th-5th speed synchronizer and cups.
3. Using a puller mounted behind 4th-5th clutch hub, remove hub and bearing.
4. Remove 4th gear, bearings, and spacer.
5. Remove snap ring, thrust washer, and locating ball.
6. Remove 3rd gear, bearings, and spacer.
7. Remove 2nd-3rd speed synchronizer and cups.
8. Remove snap ring and 2nd-3rd shift hub.
9. Remove 2nd gear, bearings and spacer.
10. Remove snap ring, thrust washer, and locating ball.
11. Remove 1st gear, bearings, and spacer.
12. Remove 1st speed synchronizer.

Procedure - See Mainshaft REAR Facing Up illustration

13. With mainshaft rear facing up, install the mainshaft assembly vertically in a vise.
14. Using a puller, remove reverse gear, washer, and rear bearing.
15. Remove reverse gear bearings and spacer.

NEED THESE PARTS? 226 Eaton Fuller FS-5406A parts, priced online >> Call 877-776-4600

Pro Gear and Transmission, Inc | www.progearandtransmission.com | www.pgttruckparts.com
906 West Gore St, Orlando, Fl, 32805 | +1 (877)-776-4600 | +1 (407)-872191 | parts@eprogear.com

Mainshaft FRONT Facing Up

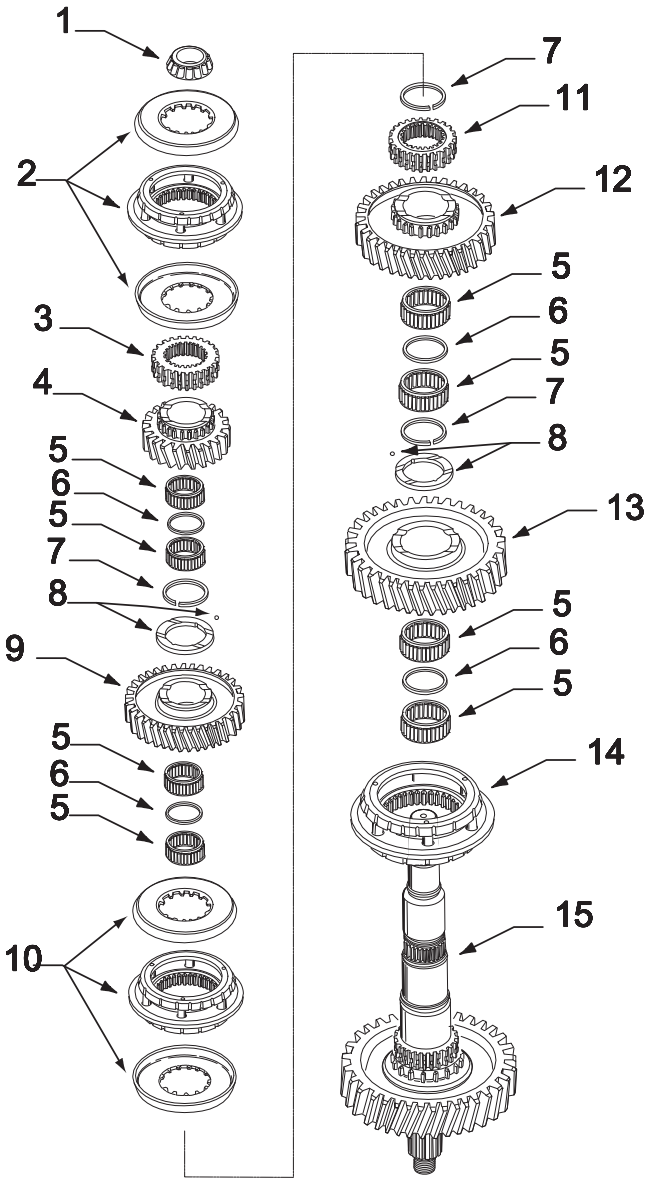

1. Front Bearing
2. 4th-5th Speed Synchronizer and Cups
3. 4th-5th Clutch Hub
4. 4th Gear
5. Gear Bearing
6. Spacer
7. Snap Ring
8. Thrust Washer and Locating Ball
9. 3rd Gear
10. 2nd-3rd Speed Synchronizer and Cups
11. 2nd-3rd Clutch Hub
12. 2nd Gear
13. 1st Gear
14. 1st Speed Synchronizer
15. Mainshaft

Mainshaft REAR Facing Up

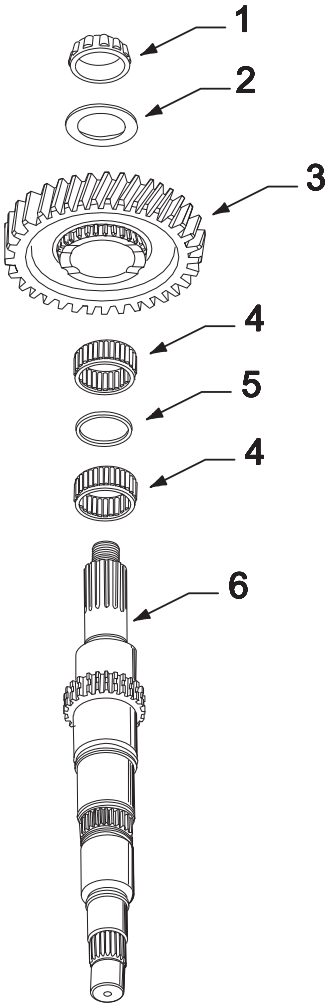

1. Rear Bearing
2. Washer
3. Reverse Gear
4. Gear Bearing
5. Spacer
6. Mainshaft

NEED THESE PARTS? 226 Eaton Fuller FS-5406A parts, priced online >> Call 877-776-4600

Pro Gear and Transmission, Inc | www.progearandtransmission.com | www.pgttruckparts.com
906 West Gore St, Orlando, Fl, 32805 | +1 (877)-776-4600 | +1 (407)-872191 | parts@eprogear.com

How to Assemble the FS-6305 Mainshaft Assembly

Special Instructions

CAUTION: Do not heat the bearing above 275°F (136°C). If possible, use a heat lamp as the source.

Lubricate the gear bearing bores, gear hub faces, split washers, synchronizer friction surfaces, synchronizer cups and the mainshaft with transmission lube as the mainshaft is assembled.

WARNING: Wear safety glasses when installing snap rings.

Special Tools

Vise with brass jaws or wood blocks
Sleeve type bearing driver
Snap ring pliers

Procedure - See Mainshaft REAR Facing Up illustration

1. With mainshaft rear facing up, install the mainshaft assembly vertically in a vise.
2. Install reverse gear bearings with spacer between bearings.
3. With reverse gear clutching teeth down, install reverse gear.
4. Install reverse gear washer. Washer can be installed either way.
5. Use a sleeve type bearing driver or heat lamp and install the rear mainshaft bearing.

Procedure - See Mainshaft FRONT Facing Up illustration

6. With mainshaft front facing up, install the mainshaft assembly vertically in a vise.
7. Install the 1st-reverse synchronizer.
8. Install 1st gear bearings with spacer between the bearings.
9. With 1st gear clutching teeth down, install 1st gear.
10. Install locating ball and washer in mainshaft groove. Washer can be installed either way.
11. Install snap ring in mainshaft groove.
12. Install 2nd gear bearings with spacer between bearings.
13. With 2nd gear clutching teeth up, install 2nd gear.
14. With 2nd-3rd clutch hub stepped face up, install 2nd-3rd clutch hub.
15. Install snap ring in mainshaft groove.
16. Install 2nd-3rd speed synchronizer and cups.
17. Install 3rd gear bearings with spacer between bearings.
18. With 3rd gear clutching teeth down, install 3rd gear.
19. Install locating ball and washer. Washer can be installed either way.
20. Install snap ring in mainshaft groove.
21. Install 4th gear bearings with spacer between bearings.
22. With 4th gear clutching teeth up, install 4th gear.
23. With 4th-5th clutch hub shoulder end facing down, install 4th-5th clutch hub.
24. Install 4th-5th speed synchronizer and cups.
25. Use a sleeve type driver and install the front mainshaft bearing.

Final Check

Make sure the mainshaft gears rotate freely.

Pro Gear and Transmission, Inc | www.progearandtransmission.com | www.pgttruckparts.com
906 West Gore St, Orlando, Fl, 32805 | +1 (877)-776-4600 | +1 (407)-872191 | parts@eprogear.com

Mainshaft REAR Facing Up

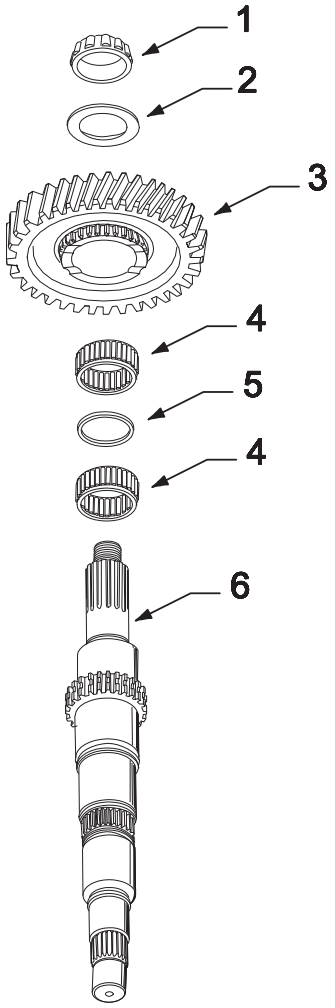

1. Rear Bearing
2. Washer
3. Reverse Gear
4. Gear Bearing
5. Spacer
6. Mainshaft

Mainshaft FRONT Facing Up

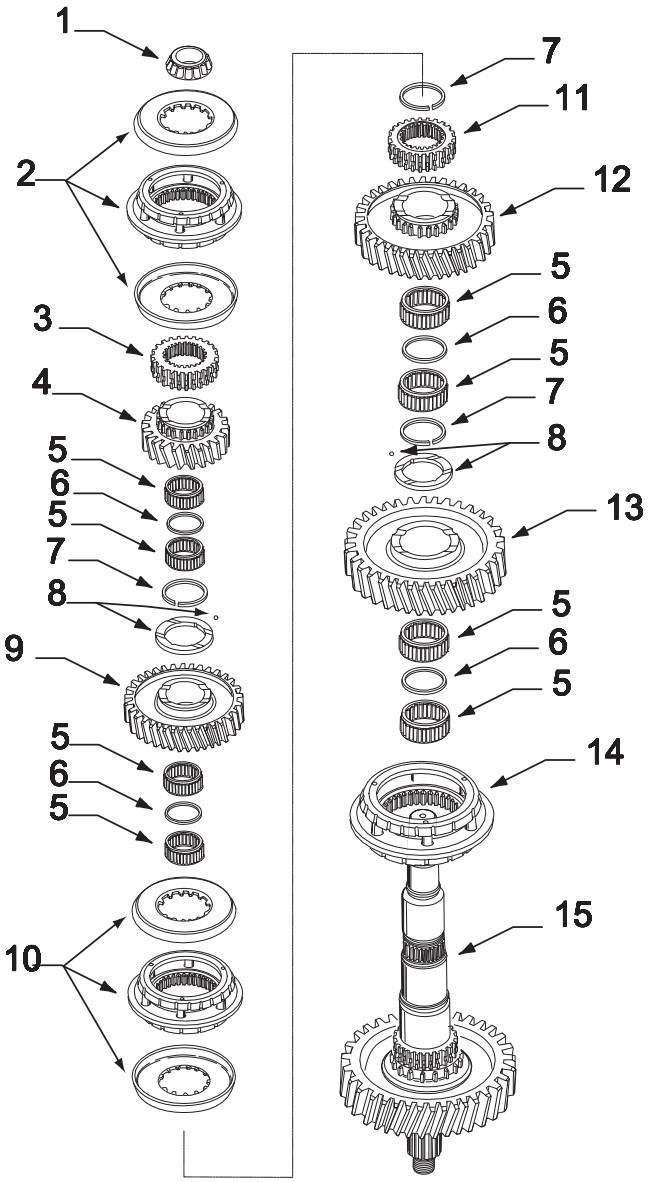

1. Front Bearing
2. 4th-5th Speed Synchronizer and Cups
3. 4th-5th Clutch Hub
4. 4th Gear
5. Gear Bearing
6. Spacer
7. Snap Ring
8. Thrust Washer and Locating Ball
9. 3rd Gear
10. 2nd-3rd Speed Synchronizer and Cups
11. 2nd-3rd Clutch Hub
12. 2nd Gear
13. 1st Gear
14. 1st Speed Synchronizer
15. Mainshaft

NEED THESE PARTS? 226 Eaton Fuller FS-5406A parts, priced online >> Call 877-776-4600

Pro Gear and Transmission, Inc | www.progearandtransmission.com | www.pgttruckparts.com
906 West Gore St, Orlando, Fl, 32805 | +1 (877)-776-4600 | +1 (407)-872191 | parts@eprogear.com

How to Disassemble the FS-5306/6306 Mainshaft Assembly

Special Instructions

During disassembly, lay all parts on a clean bench in order of removal to facilitate reassembly.

WARNING: Wear safety glasses when removing snap rings.

Special Tools

Vise with brass jaws or wood blocks

Snap ring pliers

Bearing puller

Procedure - See Mainshaft FRONT Facing Up illustration

1. With mainshaft front facing up, install the mainshaft assembly vertically in a vise.
2. Remove 5th-6th speed synchronizer and cups.
3. Using a puller mounted behind 5th-6th clutch hub, remove hub and bearing.
4. Remove 5th gear and bearings.
5. Remove snap ring, thrust washer, and locating ball.
6. Remove 4th gear and bearings.
7. Remove 3rd-4th speed synchronizer and cups.
8. Remove snap ring and 3rd-4th clutch hub.
9. Remove 3rd gear and bearings.
10. Remove snap ring, thrust washer, and locating ball.
11. Remove 2nd gear and bearings.
12. Remove 1st-2nd speed synchronizer and cups.

Procedure - See Mainshaft REAR Facing Up illustration

13. With mainshaft rear facing up, install the mainshaft assembly vertically in a vise.
14. Using a puller, remove reverse gear, washer, and rear bearing.
15. Remove reverse gear bearings and sliding clutch.
16. Remove snap ring and clutch hub.
17. Remove 1st gear and bearings.

NEED THESE PARTS? 226 Eaton Fuller FS-5406A parts, priced online >> Call 877-776-4600

Pro Gear and Transmission, Inc | www.progearandtransmission.com | www.pgttruckparts.com
906 West Gore St, Orlando, Fl, 32805 | +1 (877)-776-4600 | +1 (407)-872191 | parts@eprogear.com

Mainshaft FRONT Facing Up

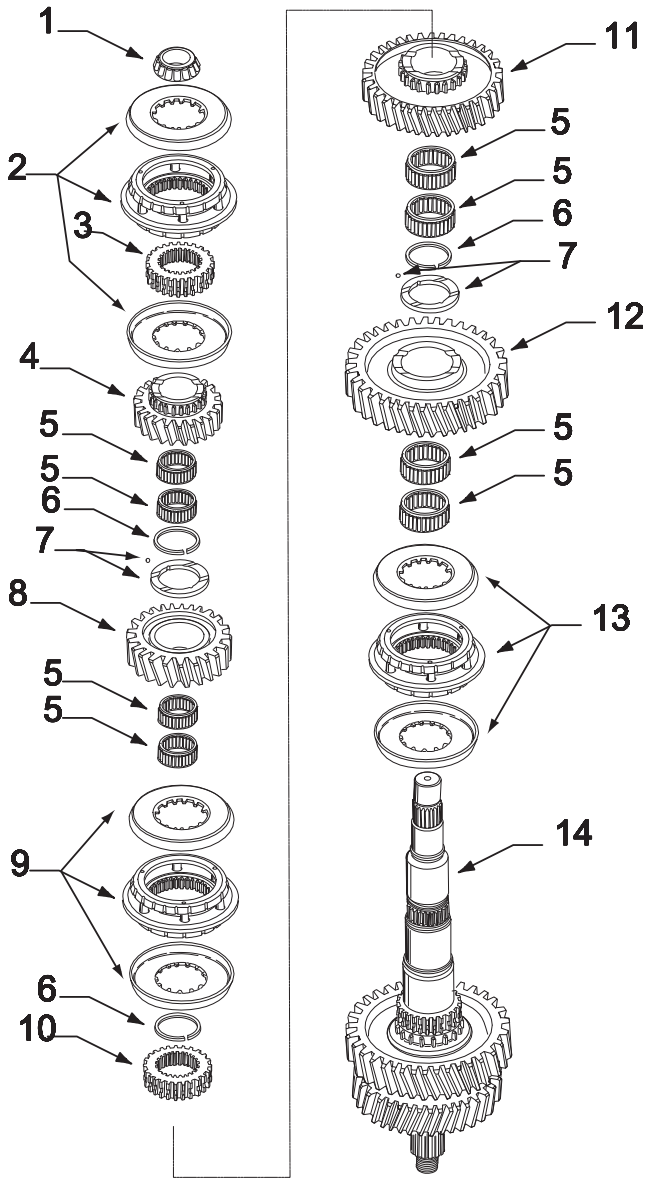

1. Front Bearing
2. 5th-6th Speed Synchronizer and Cups
3. 5th-6th Clutch Hub
4. 5th Gear
5. Gear Bearing
6. Snap Ring
7. Thrust Washer and Locating Ball
8. 4th Gear
9. 3rd-4th Speed Synchronizer and Cups
10. 3rd-4th Clutch Hub
11. 3rd Gear
12. 2nd Gear
13. 1st–2nd Speed Synchronizer and Cups
14. Mainshaft

Mainshaft REAR Facing Up

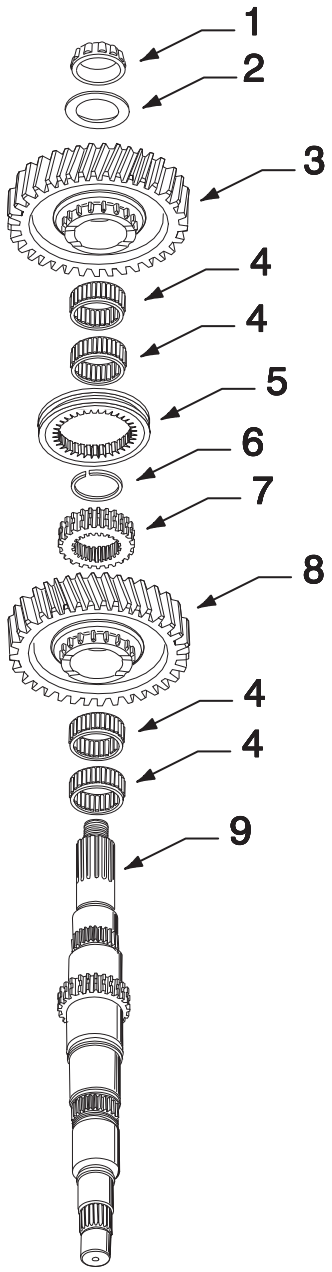

1. Rear Bearing
2. Washer
3. Reverse Gear
4. Gear Bearings
5. Sliding Clutch
6. Snap Ring
7. 1st Gear Clutch Hub
8. 1st Gear
9. Mainshaft

NEED THESE PARTS? 226 Eaton Fuller FS-5406A parts, priced online >> Call 877-776-4600

Pro Gear and Transmission, Inc | www.progearandtransmission.com | www.pgttruckparts.com
906 West Gore St, Orlando, Fl, 32805 | +1 (877)-776-4600 | +1 (407)-872191 | parts@eprogear.com

How to Assemble the FS-5306/6306 Mainshaft Assembly

Special Instructions

CAUTION: Do not heat the bearing above 275°F (136°C). If possible, use a heat lamp as the source.

Lubricate the gear bearing bores, gear hub faces, synchronizer friction surfaces, synchronizer cups and the mainshaft with transmission lube as the mainshaft is assembled.

WARNING: Wear safety glasses when installing snap rings.

Special Tools

Vise with brass jaws or wood blocks

Sleeve type bearing driver

Snap ring pliers

Procedure - See Mainshaft REAR Facing Up illustration

1. With mainshaft rear facing up, install the mainshaft assembly vertically in a vise.
2. Install 1st gear bearings.
3. With 1st gear clutching teeth down, install 1st gear.
4. With reverse gear clutch hub notched teeth facing down, install clutch hub.
5. Install snap ring.
6. With reverse gear sliding clutch counterbore up, install sliding clutch.
7. Install reverse gear bearings.
8. With reverse gear clutching teeth facing down, install reverse gear.
9. Install reverse gear washer. Washer can be installed either way.
10. Use a sleeve type driver or heat lamp and install the rear mainshaft bearing.

Procedure - See Mainshaft FRONT Facing Up illustration

11. With mainshaft front facing up, install the mainshaft assembly vertically in a vise.
12. Install the 1st-2nd synchronizer and cups.
13. Install 2nd gear bearings.
14. With 2nd gear clutching teeth down, install 2nd gear.
15. Install locating ball and washer in mainshaft groove. Washer can be installed either way.
16. Install snap ring in mainshaft groove.
17. Install 3rd gear bearings.
18. With 3rd gear clutching teeth up, install 3rd gear.
19. With 3rd-4th clutch hub stepped face up, install 3rd-4th clutch hub.
20. Install snap ring in mainshaft groove.
21. Install 3rd-4th speed synchronizer and cups.
22. Install 4th gear bearings.
23. With 4th gear clutching teeth down, install 3rd gear.

NEED THESE PARTS? 226 Eaton Fuller FS-5406A parts, priced online >> Call 877-776-4600

Pro Gear and Transmission, Inc | www.progearandtransmission.com | www.pgttruckparts.com
906 West Gore St, Orlando, Fl, 32805 | +1 (877)-776-4600 | +1 (407)-872191 | parts@eprogear.com

24. Install locating ball and washer. Washer can be installed either way.

25. Install snap ring in mainshaft groove.

26. Install 5th gear bearings.

27. With 5th gear clutching teeth up, install 5th gear.

28. With 5th-6th clutch hub flat surface facing up, install 5th-6th clutch hub.

29. Install 5th-6th speed synchronizer and cups.

30. Use a sleeve type driver and install the front mainshaft bearing.

Final Check

Make sure the mainshaft gears rotate freely.

Mainshaft REAR Facing Up

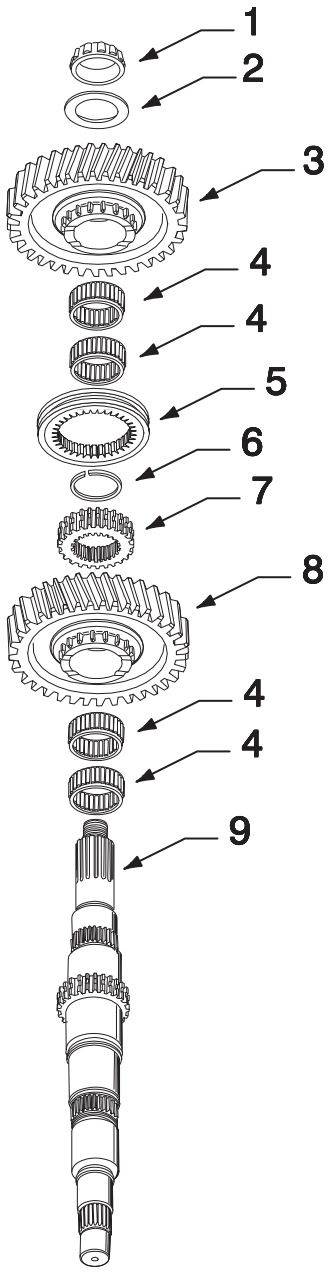

1. Rear Bearing
2. Washer
3. Reverse Gear
4. Gear Bearings
5. Sliding Clutch
6. Snap Ring
7. 1st Gear Clutch Hub
8. 1st Gear
9. Mainshaft

NEED THESE PARTS? 226 Eaton Fuller FS-5406A parts, priced online >> Call 877-776-4600

Pro Gear and Transmission, Inc | www.progearandtransmission.com | www.pgttruckparts.com
906 West Gore St, Orlando, Fl, 32805 | +1 (877)-776-4600 | +1 (407)-872191 | parts@eprogear.com

Mainshaft FRONT Facing Up

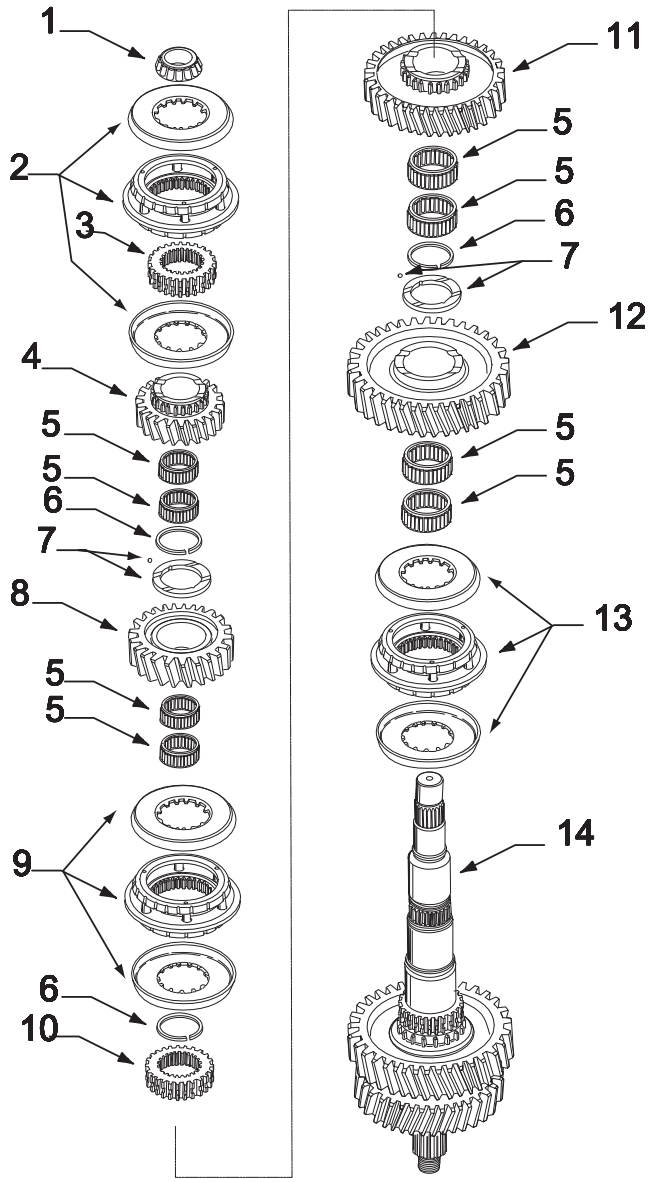

1. Front Bearing
2. 5th-6th Speed Synchronizer and Cups
3. 5th-6th Clutch Hub
4. 5th Gear
5. Gear Bearing
6. Snap Ring
7. Thrust Washer and Locating Ball
8. 4th Gear
9. 3rd-4th Speed Synchronizer and Cups
10. 3rd-4th Clutch Hub
11. 3rd Gear
12. 2nd Gear
13. 1st–2nd Speed Synchronizer and Cups
14. Mainshaft

NEED THESE PARTS? 226 Eaton Fuller FS-5406A parts, priced online >> Call 877-776-4600

Pro Gear and Transmission, Inc | www.progearandtransmission.com | www.pgttruckparts.com
906 West Gore St, Orlando, Fl, 32805 | +1 (877)-776-4600 | +1 (407)-872191 | parts@eprogear.com

How to Disassemble the FS-5406/6406 and FSO-6406 Mainshaft Assembly

Special Instructions

During disassembly, lay all parts on a clean bench in order of removal to facilitate reassembly.

WARNING: Wear safety glasses when removing snap rings.

Special Tools

Vise with brass jaws or wood blocks

Snap ring pliers

Bearing puller

Procedure - See Mainshaft FRONT Facing Up illustration

1. With mainshaft front facing up, install the mainshaft assembly vertically in a vise.
2. Remove 5th-6th speed synchronizer and cups.
3. Using a puller mounted behind 5th-6th clutch hub, remove hub and bearing.
4. Remove 5th gear and bearings.
5. Remove snap ring, thrust washer, and locating ball.
6. Remove 4th gear and bearings.
7. Remove 3rd-4th speed synchronizer and cups.
8. Remove snap ring and 3rd-4th clutch hub.
9. Remove 3rd gear and bearings.
10. Remove snap ring, thrust washer, and locating ball.
11. Remove 2nd gear and bearings.
12. Remove 1st-2nd speed synchronizer.

Procedure - See Mainshaft REAR Facing Up illustration

13. With mainshaft rear facing up, install the mainshaft assembly vertically in a vise.
14. Using a puller, remove reverse gear, washer, and rear bearing.
15. Remove reverse gear bearing and sliding clutch.
16. Remove snap ring and clutch hub.
17. Remove 1st gear and bearings.

NEED THESE PARTS? 226 Eaton Fuller FS-5406A parts, priced online >> Call 877-776-4600

Pro Gear and Transmission, Inc | www.progearandtransmission.com | www.pgttruckparts.com
906 West Gore St, Orlando, Fl, 32805 | +1 (877)-776-4600 | +1 (407)-872191 | parts@eprogear.com

Mainshaft FRONT Facing Up

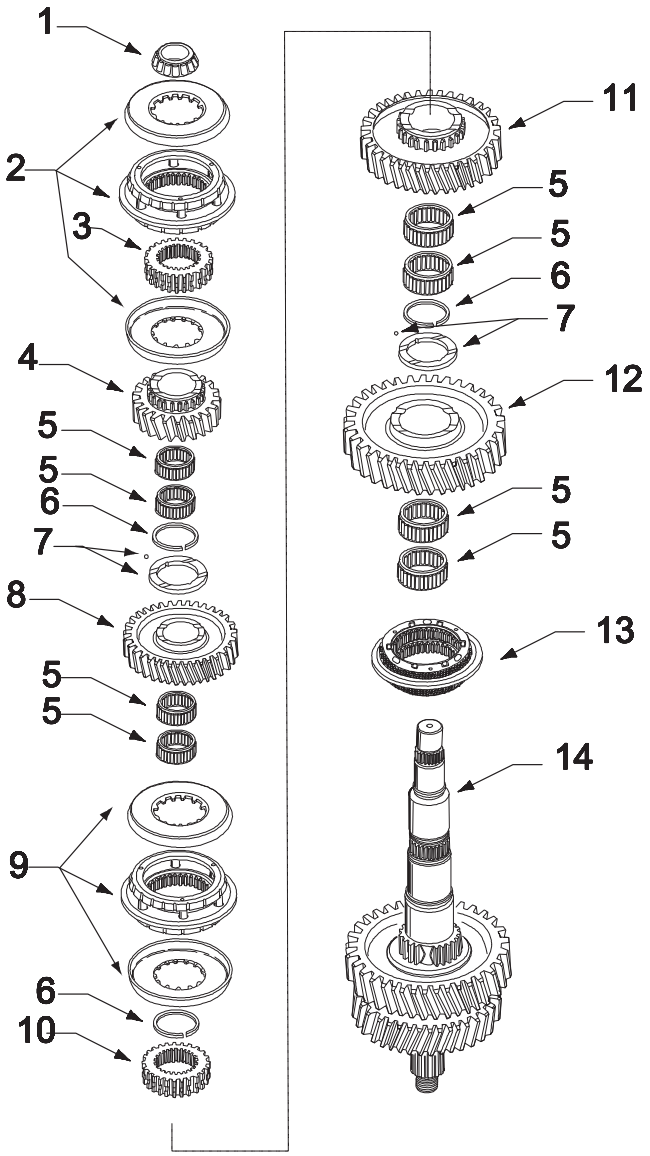

1. Front Bearing
2. 5th-6th Speed Synchronizer and Cups
3. 5th-6th Clutch Hub
4. 5th Gear
5. Gear Bearing
6. Snap Ring
7. Thrust Washer and Locating Ball
8. 4th Gear
9. 3rd-4th Speed Synchronizer and Cups
10. 3rd-4th Clutch Hub
11. 3rd Gear
12. 2nd Gear
13. 1st–2nd Speed Synchronizer
14. Mainshaft

Mainshaft REAR Facing Up

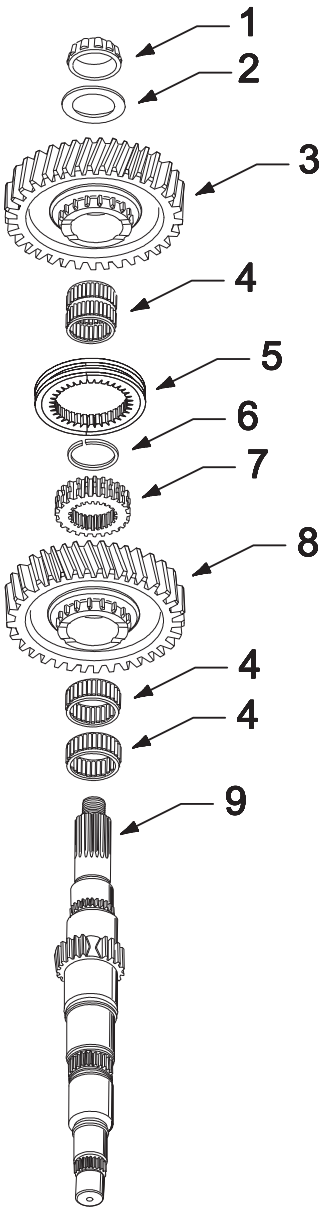

1. Rear Bearing
2. Washer
3. Reverse Gear
4. Gear Bearing
5. Sliding Clutch
6. Snap Ring
7. 1st Gear Clutch Hub
8. 1st Gear
9. Mainshaft

NEED THESE PARTS? 226 Eaton Fuller FS-5406A parts, priced online >> Call 877-776-4600

Pro Gear and Transmission, Inc | www.progearandtransmission.com | www.pgttruckparts.com
906 West Gore St, Orlando, Fl, 32805 | +1 (877)-776-4600 | +1 (407)-872191 | parts@eprogear.com

How to Assemble the FS-5406/6406 and FSO-6406 Mainshaft Assembly

Special Instructions

CAUTION: Do not heat the bearing above 275°F (136°C). If possible, use a heat lamp as the source.

Lubricate the gear bearing bores, gear hub faces, synchronizer friction surfaces, synchronizer cups and the mainshaft with transmission lube as the mainshaft is assembled.

WARNING: Wear safety glasses when installing snap rings.

Special Tools

Vise with brass jaws or wood blocks

Sleeve type bearing driver

Snap ring pliers

Procedure - See Mainshaft REAR Facing Up illustration

1. With mainshaft rear facing up, install the mainshaft assembly vertically in a vise.
2. Install 1st gear bearings.
3. With 1st gear clutching teeth down, install 1st gear.
4. With reverse gear clutch hub notched teeth facing down, install clutch hub.
5. Install snap ring.
6. With reverse gear sliding tapered clutching teeth facing up, install sliding clutch.
7. Install reverse gear bearing.
8. With reverse gear clutching teeth facing down, install reverse gear.
9. Install reverse gear washer. Washer can be installed either way.
10. Use a sleeve type driver or heat lamp and install the rear mainshaft bearing.

Procedure - See Mainshaft FRONT Facing Up illustration

11. With mainshaft front facing up, install the mainshaft assembly vertically in a vise.
12. Install the 1st-2nd synchronizer.
    a. Slide synchronizer part way on mainshaft to engage one sliding clutch spline teeth on the mainshaft spline teeth.
    b. Slide the synchronizer center plate on the mainshaft aligning the three internal fingers with the three mainshaft grooves to get it started.
    c. Rotate the 2nd sliding clutch using fingers so it engages the splines on the mainshaft and position center plate axially to the mainshaft spline teeth center.
13. Install 2nd gear bearings.
14. With 2nd gear clutching teeth down, install 2nd gear.
15. Install locating ball and washer in mainshaft groove. Washer can be installed either way.
16. Install snap ring in mainshaft groove.
17. Install 3rd gear bearings.
18. With 3rd gear clutching teeth up, install 3rd gear.

NEED THESE PARTS? 226 Eaton Fuller FS-5406A parts, priced online >> Call 877-776-4600

Pro Gear and Transmission, Inc | www.progearandtransmission.com | www.pgttruckparts.com
906 West Gore St, Orlando, Fl, 32805 | +1 (877)-776-4600 | +1 (407)-872191 | parts@eprogear.com

19. With 3rd-4th clutch hub stepped face up, install 3rd-4th clutch hub.
20. Install snap ring in mainshaft groove.
21. Install 3rd-4th speed synchronizer and cups.
22. Install 4th gear bearings.
23. With 4th gear clutching teeth down, install 3rd gear.
24. Install locating ball and washer. Washer can be installed either way.
25. Install snap ring in mainshaft groove.
26. Install 5th gear bearings.
27. With 5th gear clutching teeth up, install 5th gear.
28. With 5th-6th clutch hub flat surface facing up, install 5th-6th clutch hub.
29. Install 5th-6th speed synchronizer and cups.
30. Use a sleeve type driver and install the front mainshaft bearing.

Final Check

Make sure the mainshaft gears rotate freely.

Mainshaft REAR Facing Up

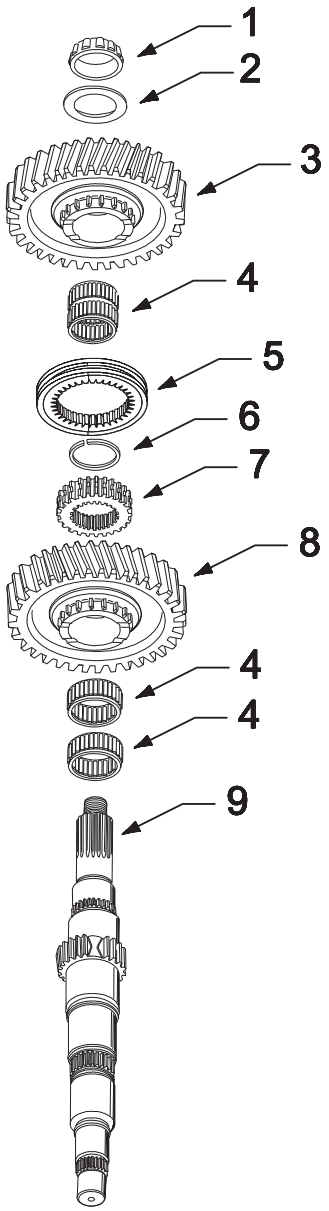

1. Rear Bearing
2. Washer
3. Reverse Gear
4. Gear Bearing
5. Sliding Clutch
6. Snap Ring
7. 1st Gear Clutch Hub
8. 1st Gear
9. Mainshaft

NEED THESE PARTS? 226 Eaton Fuller FS-5406A parts, priced online >> Call 877-776-4600

Pro Gear and Transmission, Inc | www.progearandtransmission.com | www.pgttruckparts.com
906 West Gore St, Orlando, Fl, 32805 | +1 (877)-776-4600 | +1 (407)-872191 | parts@eprogear.com

Mainshaft FRONT Facing Up

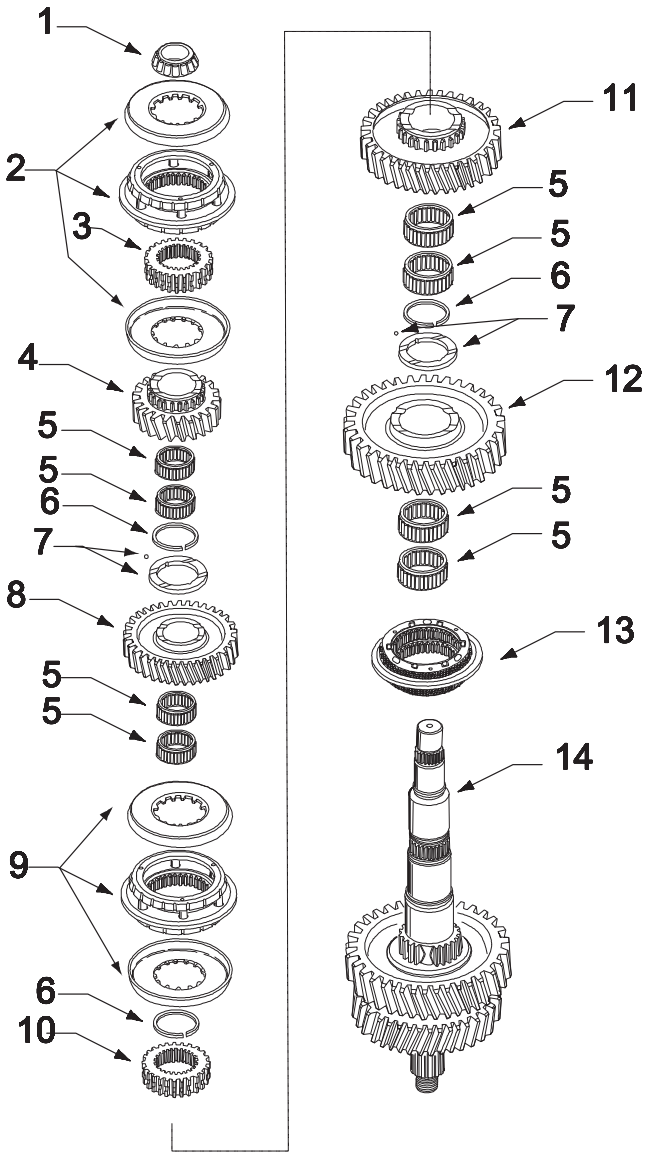

1. Front Bearing
2. 5th-6th Speed Synchronizer and Cups
3. 5th-6th Clutch Hub
4. 5th Gear
5. Gear Bearing
6. Snap Ring
7. Thrust Washer and Locating Ball
8. 4th Gear
9. 3rd-4th Speed Synchronizer and Cups
10. 3rd-4th Clutch Hub
11. 3rd Gear
12. 2nd Gear
13. 1st–2nd Speed Synchronizer
14. Mainshaft

NEED THESE PARTS? 226 Eaton Fuller FS-5406A parts, priced online >> Call 877-776-4600

Pro Gear and Transmission, Inc | www.progearandtransmission.com | www.pgttruckparts.com
906 West Gore St, Orlando, Fl, 32805 | +1 (877)-776-4600 | +1 (407)-872191 | parts@eprogear.com

How to Disassemble the FSO-8406 Mainshaft Assembly

Special Instructions

During disassembly, lay all parts on a clean bench in order of removal to facilitate reassembly.

WARNING: Wear safety glasses when removing snap rings.

Special Tools

Vise with brass jaws or wood blocks

Snap ring pliers

Bearing puller

Procedure - See Mainshaft FRONT Facing Up illustration

1. With mainshaft front facing up, install the mainshaft assembly vertically in a vise.
2. Remove overdrive-5th speed synchronizer and cups.
3. Using a puller mounted behind overdrive-5th clutch hub, remove hub and bearing.
4. Remove overdrive gear and bearings.
5. Remove snap ring, thrust washer, and locating ball.
6. Remove 4th gear and bearings.
7. Remove 3rd-4th speed synchronizer and cups.
8. Remove snap ring and 3rd-4th clutch hub.
9. Remove 3rd gear and bearings.
10. Remove snap ring, thrust washer, and locating ball.
11. Remove 2nd gear and bearings.
12. Remove 1st-2nd speed synchronizer:
    a. Rotate 2nd sliding clutch with your fingers so that it disengages the splines on the mainshaft and position center plate axially to the mainshaft spline teeth center.
    b. Slide the synchronizer center plate off the mainshaft to separate the three internal fingers with the three mainshaft grooves and to disengage the sliding clutch spline teeth from the mainshaft spline teeth.

Procedure - See Mainshaft REAR Facing Up illustration

13. With mainshaft rear facing up, install the mainshaft assembly vertically in a vise.
14. Using a puller, remove reverse gear, washer, and rear bearing.
15. Remove reverse gear bearing and sliding clutch.
16. Remove snap ring and clutch hub.
17. Remove 1st gear and bearings.

Mainshaft FRONT Facing Up

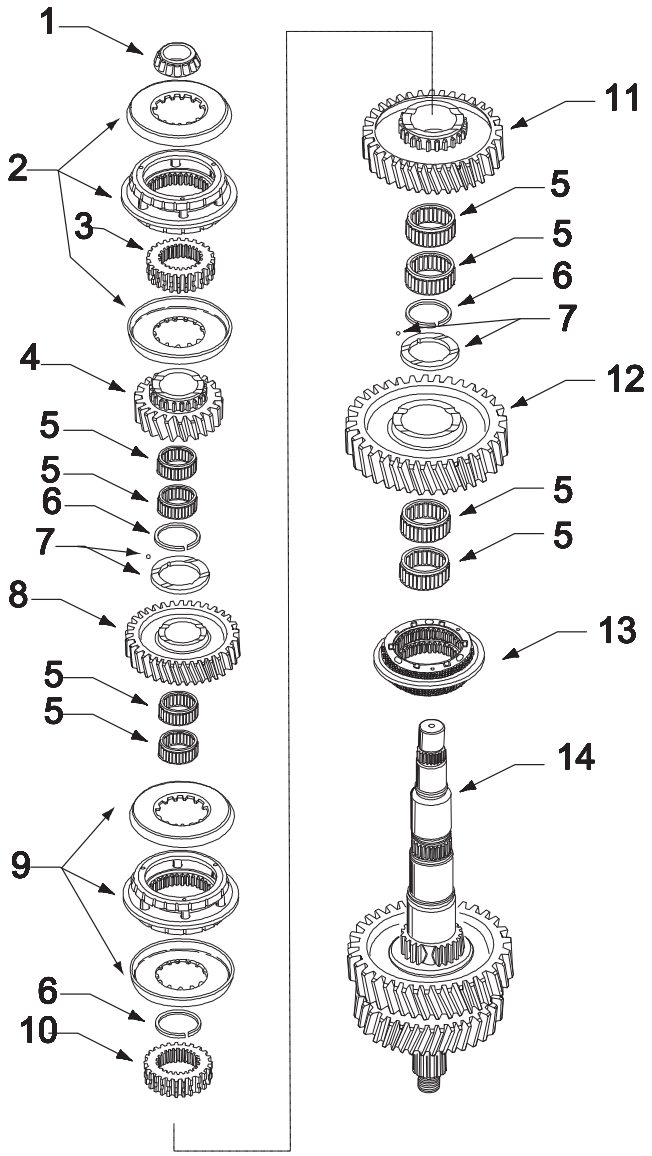

1. Front Bearing
2. 5th-6th Speed Synchronizer and Cups
3. 5th-6th Clutch Hub
4. 5th Gear
5. Gear Bearing
6. Snap Ring
7. Thrust Washer and Locating Ball
8. 4th Gear
9. 3rd-4th Speed Synchronizer and Cups
10. 3rd-4th Clutch Hub
11. 3rd Gear
12. 2nd Gear
13. 1st–2nd Speed Synchronizer
14. Mainshaft

Mainshaft REAR Facing Up

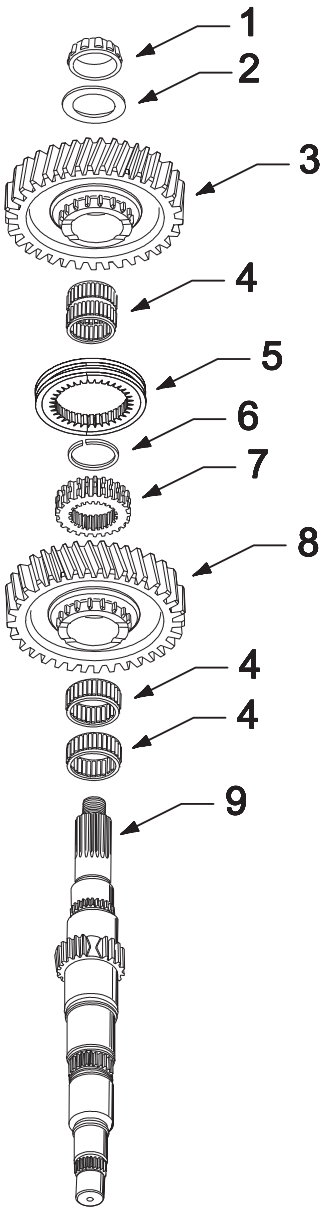

1. Rear Bearing
2. Washer
3. Reverse Gear
4. Gear Bearings
5. Sliding Clutch
6. Snap Ring
7. 1st Gear Clutch Hub
8. 1st Gear
9. Mainshaft

NEED THESE PARTS? 226 Eaton Fuller FS-5406A parts, priced online >> Call 877-776-4600

Pro Gear and Transmission, Inc | www.progearandtransmission.com | www.pgttruckparts.com
906 West Gore St, Orlando, Fl, 32805 | +1 (877)-776-4600 | +1 (407)-872191 | parts@eprogear.com

How to Assemble the FSO-8406 Mainshaft Assembly

Special Instructions

CAUTION: Do not heat the bearing above 275°F (136°C). If possible, use a heat lamp as the source.

Lubricate the gear bearing bores, gear hub faces, synchronizer friction surfaces, synchronizer cups and the mainshaft with transmission lube as the mainshaft is assembled.

WARNING: Wear safety glasses when installing snap rings.

Special Tools

Vise with brass jaws or wood blocks

Sleeve type bearing driver

Snap ring pliers

Procedure - See Mainshaft REAR Facing Up illustration

1. With mainshaft rear facing up, install the mainshaft assembly vertically in a vise.
2. Install 1st gear bearings.
3. With 1st gear clutching teeth down, install 1st gear.
4. With reverse gear clutch hub notched teeth facing down, install clutch hub.
5. Install snap ring.
6. With reverse gear sliding tapered clutching teeth facing up, install sliding clutch.
7. Install reverse gear bearing.
8. With reverse gear clutching teeth facing down, install reverse gear.
9. Install reverse gear washer. Washer can be installed either way.
10. Use a sleeve type driver or heat lamp and install the rear mainshaft bearing.

Procedure - See Mainshaft FRONT Facing Up illustration

11. With mainshaft front facing up, install the mainshaft assembly vertically in a vise.
12. Install the 1st-2nd synchronizer.
    a. Slide synchronizer part way on mainshaft to engage one sliding clutch spline teeth on the mainshaft spline teeth.
    b. Slide the synchronizer center plate on the mainshaft aligning the three internal fingers with the three mainshaft grooves to get it started.
    c. Rotate the 2nd sliding clutch using fingers so it engages the splines on the mainshaft and position center plate axially to the mainshaft spline teeth center.
13. Install 2nd gear bearings.
14. With 2nd gear clutching teeth down, install 2nd gear.
15. Install locating ball and washer in mainshaft groove. Washer can be installed either way.
16. Install snap ring in mainshaft groove.
17. Install 3rd gear bearings.
18. With 3rd gear clutching teeth up, install 3rd gear.

NEED THESE PARTS? 226 Eaton Fuller FS-5406A parts, priced online >> Call 877-776-4600

Pro Gear and Transmission, Inc | www.progearandtransmission.com | www.pgttruckparts.com
906 West Gore St, Orlando, Fl, 32805 | +1 (877)-776-4600 | +1 (407)-872191 | parts@eprogear.com

19. With 3rd-4th clutch hub stepped face up, install 3rd-4th clutch hub
20. Install snap ring in mainshaft groove.
21. Install 3rd-4th speed synchronizer and cups.
22. Install 4th gear bearings.
23. With 4th gear clutching teeth down, install 4th gear.
24. Install locating ball and washer. Washer can be installed either way.
25. Install snap ring in mainshaft groove.
26. Install overdrive gear bearings.
27. With overdrive gear clutching teeth up, install overdrive gear.
28. With overdrive-5th clutch hub flat surface facing up, install 5th-6th clutch hub.
29. Install overdrive-5th speed synchronizer and cups.
30. Use a sleeve type driver and install the front mainshaft bearing.

Final Check

Make sure the mainshaft gears rotate freely.

Mainshaft REAR Facing Up

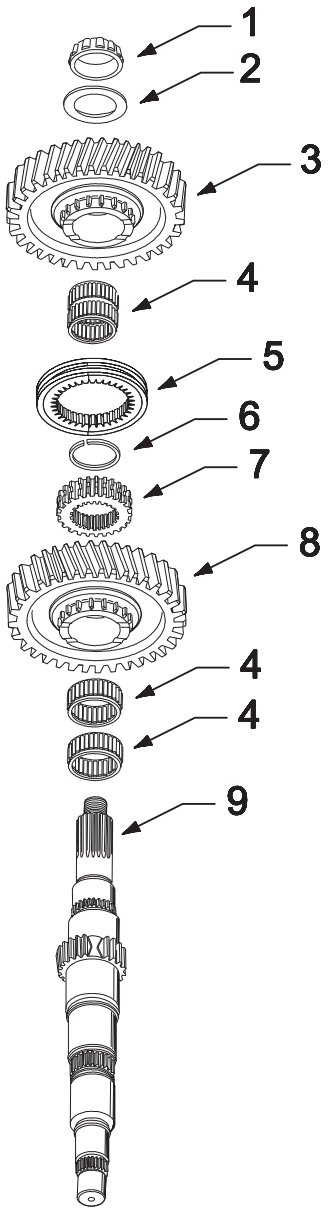

1. Rear Bearing
2. Washer
3. Reverse Gear
4. Gear Bearing
5. Sliding Clutch
6. Snap Ring
7. 1st Gear Clutch Hub
8. 1st Gear
9. Mainshaft

NEED THESE PARTS? 226 Eaton Fuller FS-5406A parts, priced online >> Call 877-776-4600

Pro Gear and Transmission, Inc | www.progearandtransmission.com | www.pgttruckparts.com
906 West Gore St, Orlando, Fl, 32805 | +1 (877)-776-4600 | +1 (407)-872191 | parts@eprogear.com

Mainshaft FRONT Facing Up

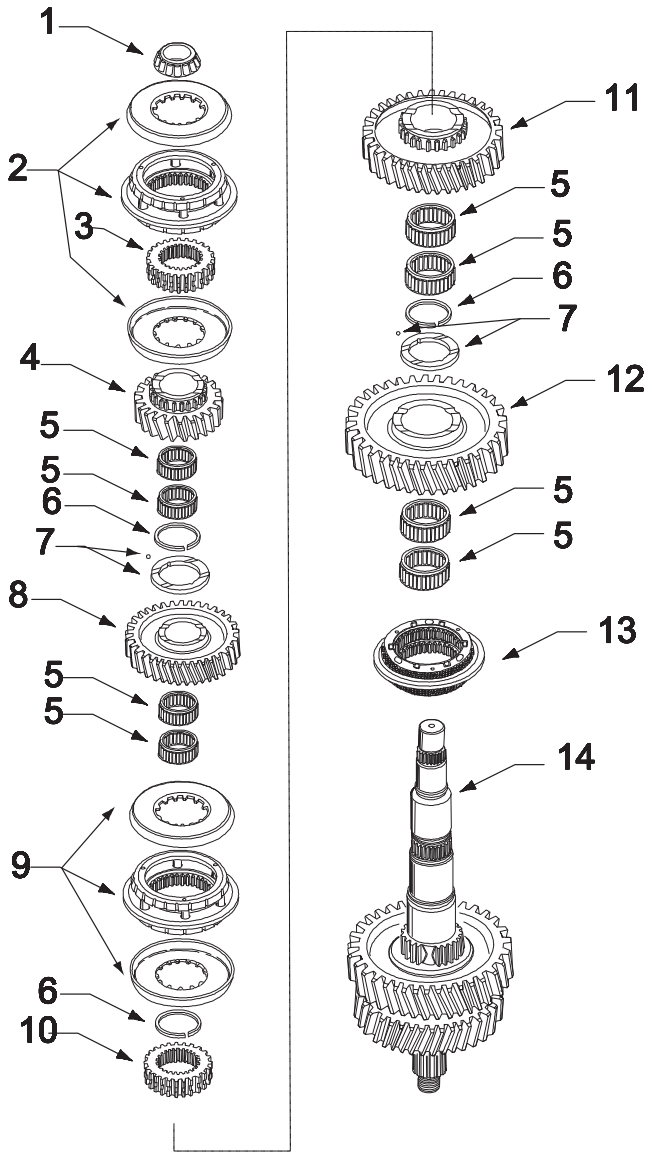

1. Front Bearing
2. 5th-6th Speed Synchronizer and Cups
3. 5th-6th Clutch Hub
4. 5th Gear
5. Gear Bearing
6. Snap Ring
7. Thrust Washer and Locating Ball
8. 4th Gear
9. 3rd-4th Speed Synchronizer and Cups
10. 3rd-4th Clutch Hub
11. 3rd Gear
12. 2nd Gear
13. 1st–2nd Speed Synchronizer
14. Mainshaft

NEED THESE PARTS? 226 Eaton Fuller FS-5406A parts, priced online >> Call 877-776-4600

Pro Gear and Transmission, Inc | www.progearandtransmission.com | www.pgttruckparts.com
906 West Gore St, Orlando, Fl, 32805 | +1 (877)-776-4600 | +1 (407)-872191 | parts@eprogear.com

NEED THESE PARTS? 226 Eaton Fuller FS-5406A parts, priced online >> Call 877-776-4600

Pro Gear and Transmission, Inc | www.progearandtransmission.com | www.pgttruckparts.com
906 West Gore St, Orlando, Fl, 32805 | +1 (877)-776-4600 | +1 (407)-872191 | parts@eprogear.com

How to Disassemble the FS-4X05 Countershaft Assembly

Special Instructions

This procedure destroys the bearing assembly and should not be attempted unless replacement of bearing is planned.

WARNING: Wear safety glasses when removing snap rings.

Special Tools

Maul and chisel

Snap ring pliers

Press

Procedure -

1. Using a maul and chisel, remove the cage around roller bearings on front of countershaft.

2. Remove roller bearings and cage.

3. Using a snap ring pliers and screwdriver, move the countershaft retaining snap ring from snap ring groove and up against bearing race.

   Note: Snap ring must be completely out of snap ring groove.

4. Using the rear face of the drive gear as a base, press it from the countershaft.

5. Remove drive gear locating key from shaft.

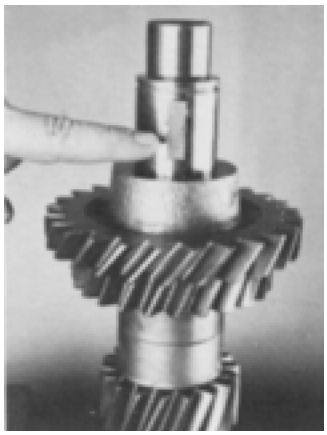

NEED THESE PARTS? 226 Eaton Fuller FS-5406A parts, priced online >> Call 877-776-4600

Pro Gear and Transmission, Inc | www.progearandtransmission.com | www.pgttruckparts.com
906 West Gore St, Orlando, Fl, 32805 | +1 (877)-776-4600 | +1 (407)-872191 | parts@eprogear.com

6. Using the rear face of 4th speed gear as a base, press it from the countershaft.

7. Remove 4th gear key from shaft.

   Note: Be sure that 4th-5th speed gear keys have been removed before removing 3rd gear from countershaft.

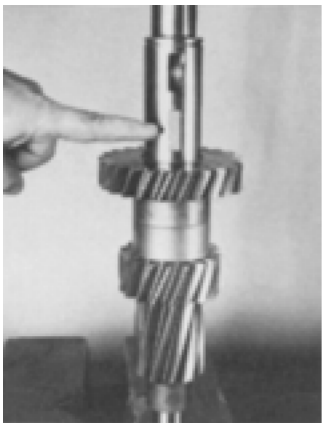

8. Using the rear face of 3rd speed gear as a base, press it from the countershaft.

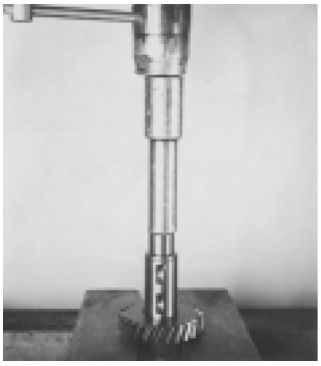

9. Using the rear face of 2nd speed gear as a base, press it from the countershaft.

NEED THESE PARTS? 226 Eaton Fuller FS-5406A parts, priced online >> Call 877-776-4600

Pro Gear and Transmission, Inc | www.progearandtransmission.com | www.pgttruckparts.com
906 West Gore St, Orlando, Fl, 32805 | +1 (877)-776-4600 | +1 (407)-872191 | parts@eprogear.com

How to Assemble the FS-4X05 Countershaft Assembly

Special Instructions

WARNING: Wear safety glasses when installing snap rings.

Special Tools

Snap ring pliers

Press

Sleeve type driver

Procedure -

1. Press 2nd gear on countershaft, long hub of gear to front of shaft.

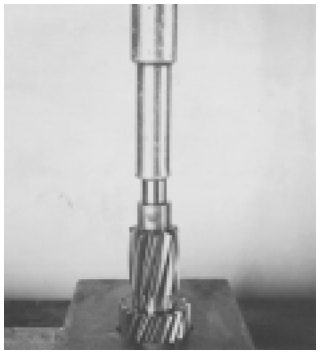

2. Press 3rd speed gear on countershaft, long hub of gear to rear of shaft.

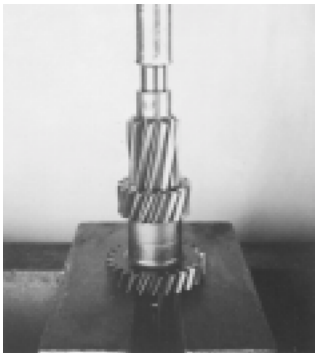

3. Install 4th and 5th speed gear keys on countershaft.

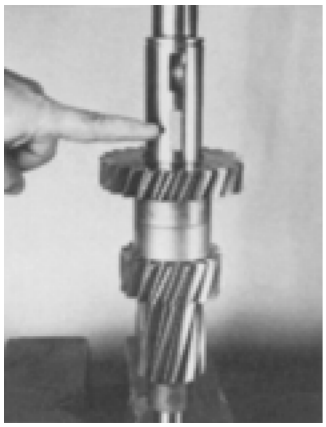

4. Align keyway of 4th speed gear to key on shaft. Press 4th gear on countershaft, with long hub of gear to front of shaft.

NEED THESE PARTS? 226 Eaton Fuller FS-5406A parts, priced online >> Call 877-776-4600

Pro Gear and Transmission, Inc | www.progearandtransmission.com | www.pgttruckparts.com
906 West Gore St, Orlando, Fl, 32805 | +1 (877)-776-4600 | +1 (407)-872191 | parts@eprogear.com

5. Install drive gear key on countershaft.

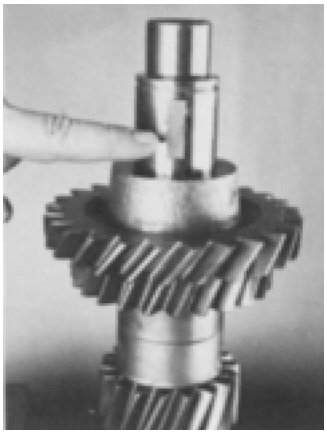

6. Align keyway of drive gear to key on shaft. Press drive gear on countershaft with long hub to rear of shaft.

7. Install the countershaft retention snap ring in snap ring groove at front of countershaft.

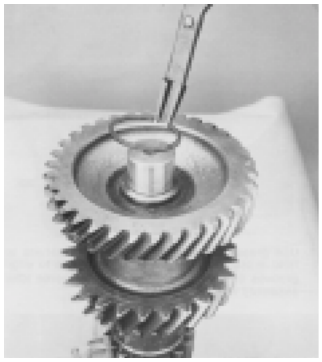

8. Using a sleeve type driver, install front countershaft bearing.

9. Using a sleeve type driver, install rear countershaft bearing.

NEED THESE PARTS? 226 Eaton Fuller FS-5406A parts, priced online >> Call 877-776-4600

Pro Gear and Transmission, Inc | www.progearandtransmission.com | www.pgttruckparts.com
906 West Gore St, Orlando, Fl, 32805 | +1 (877)-776-4600 | +1 (407)-872191 | parts@eprogear.com

How to Disassemble the FS-5X05 Countershaft Assembly

Special Instructions

This procedure destroys the bearing assembly and should not be attempted unless replacement of bearing is planned.

WARNING: Wear safety glasses when removing snap rings.

Special Tools

Bearing pullers

Snap ring pliers

Press

Procedure -

1. Position the countershaft in a vise with the front bearing up.

2. Use a screwdriver and snap ring pliers to move the snap ring out of snap ring groove and against the bearing back.

3. Using the countershaft drive gear rear face as a base, press the drive gear, snap ring, and bearing from the countershaft.

4. Use 4th gear rear face as a base and press 4th gear from the countershaft assembly.

5. If damaged, remove the rear countershaft bearing.

NEED THESE PARTS? 226 Eaton Fuller FS-5406A parts, priced online >> Call 877-776-4600

Pro Gear and Transmission, Inc | www.progearandtransmission.com | www.pgttruckparts.com
906 West Gore St, Orlando, Fl, 32805 | +1 (877)-776-4600 | +1 (407)-872191 | parts@eprogear.com

How to Assemble the FS-5X05 Countershaft Assembly

Special Instructions

CAUTION: Do not heat the bearing above 275°F (136°C). If possible, use a heat lamp as the source.

WARNING: Wear safety glasses when installing snap rings.

Special Tools

Snap ring pliers

Press

Heat lamp

Procedure -

1. With 4th gear long hub to shaft front, align 4th gear keyway with shaft key, position the gear and shaft in the press. Press 4th gear into place.

2. With drive gear long hub to shaft rear, align drive gear keyway with shaft key, position the gear and shaft in the press. Press drive gear into place.

3. Install the drive gear retaining snap ring in groove.

4. Heat and install the front countershaft bearing.

5. If removed, heat and install the rear countershaft bearing.

Pro Gear and Transmission, Inc | www.progearandtransmission.com | www.pgttruckparts.com
906 West Gore St, Orlando, Fl, 32805 | +1 (877)-776-4600 | +1 (407)-872191 | parts@eprogear.com

How to Disassemble the FS-6X05 Countershaft Assembly

Special Instructions

This procedure destroys the bearing assembly and should not be attempted unless replacement of bearing is planned.

WARNING: Wear safety glasses when removing snap rings.

Special Tools

Bearing pullers

Snap ring pliers

Press

Procedure -

1. Position puller jaws behind rear countershaft bearing and remove bearing.

2. Position countershaft in vise, front of shaft facing up. Position puller jaws into notches behind front countershaft bearing and remove bearing.

3. Remove drive gear retaining snap ring from front of shaft.

4. Using the rear face of the drive gear as a base, press it from the countershaft.

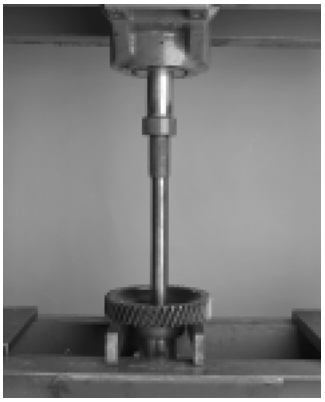

NEED THESE PARTS? 226 Eaton Fuller FS-5406A parts, priced online >> Call 877-776-4600

Pro Gear and Transmission, Inc | www.progearandtransmission.com | www.pgttruckparts.com
906 West Gore St, Orlando, Fl, 32805 | +1 (877)-776-4600 | +1 (407)-872191 | parts@eprogear.com

5. Remove drive gear locating key from shaft.

6. Using the rear face of 4th speed gear as a base, press it from the countershaft.

7. Remove 4th gear key from shaft.

8. Using the rear face of 3rd speed gear as a base, press it from the countershaft.

   Note: Be sure that 4th-5th speed gear keys have been removed before removing 3rd gear from countershaft.

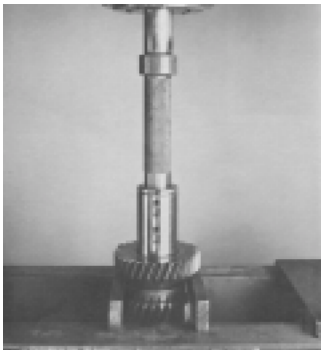

9. Using the rear face of 2nd speed gear as a base, press it from the countershaft.

NEED THESE PARTS? 226 Eaton Fuller FS-5406A parts, priced online >> Call 877-776-4600

Pro Gear and Transmission, Inc | www.progearandtransmission.com | www.pgttruckparts.com
906 West Gore St, Orlando, Fl, 32805 | +1 (877)-776-4600 | +1 (407)-872191 | parts@eprogear.com

How to Assemble the FS-6X05 Countershaft Assembly

Special Instructions

CAUTION: Do not heat the bearing above 275°F (136°C). If possible, use a heat lamp as the source.

WARNING: Wear safety glasses when installing snap rings.

Special Tools

Snap ring pliers

Press

Sleeve type driver

Procedure -

1. With 2nd gear long hub to shaft front, position the gear and shaft in the press. Press 2nd gear into place.

2. With 3rd gear long hub to shaft front, position the gear and shaft in the press. Press 3rd gear into place.

3. Install 4th and drive gear keys on countershaft.

4. With 4th gear long hub to shaft front, align 4th gear key-way with shaft key, position the gear and shaft in the press. Press 4th gear into place.

NEED THESE PARTS? 226 Eaton Fuller FS-5406A parts, priced online >> Call 877-776-4600

Pro Gear and Transmission, Inc | www.progearandtransmission.com | www.pgttruckparts.com
906 West Gore St, Orlando, Fl, 32805 | +1 (877)-776-4600 | +1 (407)-872191 | parts@eprogear.com

5. Remove drive gear key from the countershaft. Install the 4th-drive gear spacer.

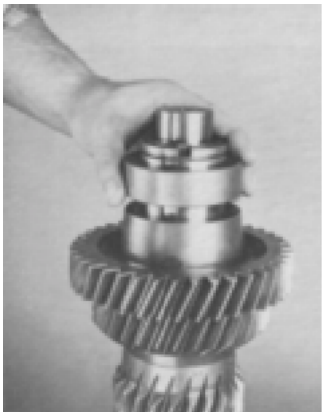

6. Install drive gear key on the countershaft.

7. With drive gear long hub to shaft rear, align drive gear keyway with shaft key, position the gear and shaft in the press. Press the drive gear into place.

8. Install the drive gear retaining snap ring in the countershaft front groove.

9. Using a sleeve type driver or heat lamp and install the front countershaft bearing.

10. Using a sleeve type driver or heat lamp and install the rear countershaft bearing.

Final Check

Make sure all gears are pressed into place.

Make sure the countershaft bearings are installed.

NEED THESE PARTS? 226 Eaton Fuller FS-5406A parts, priced online >> Call 877-776-4600

Pro Gear and Transmission, Inc | www.progearandtransmission.com | www.pgttruckparts.com
906 West Gore St, Orlando, Fl, 32805 | +1 (877)-776-4600 | +1 (407)-872191 | parts@eprogear.com

How to Disassemble the FS-5306/6306/5406/6406 and FSO-6406/8406 Countershaft Assembly

Special Instructions

As the individual countershaft gears are pressed from the shaft, make sure to remove the corresponding gear key.

WARNING: Wear safety glasses when removing snap rings.

Special Tools

Bearing pullers

Snap ring pliers

Press

Vise with brass jaws or wood blocks

Procedure -

1. Position countershaft in a vise with the front bearing up.
2. Position puller jaws into the countershaft bearing notches and remove the bearing.

3. Remove the drive gear retaining snap ring.

4. Use drive gear rear face as a base and press drive gear from the countershaft assembly.

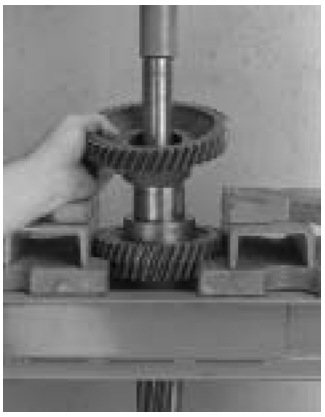

NEED THESE PARTS? 226 Eaton Fuller FS-5406A parts, priced online >> Call 877-776-4600

Pro Gear and Transmission, Inc | www.progearandtransmission.com | www.pgttruckparts.com
906 West Gore St, Orlando, Fl, 32805 | +1 (877)-776-4600 | +1 (407)-872191 | parts@eprogear.com

5. From the shaft, remove the drive gear locating key and spacer.

6. Use 5th gear rear face as a base and press 5th gear from the countershaft assembly.

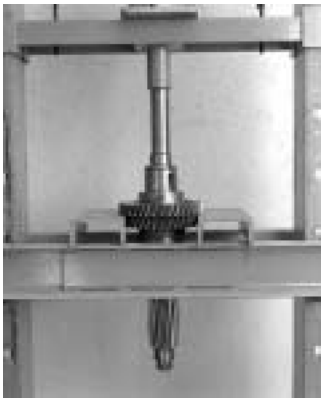

7. From the shaft, remove 5th gear locating key.

8. Use 4th gear rear face as a base and press 4th gear from the countershaft assembly.

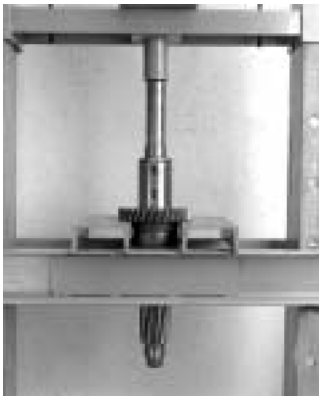

9. Use 3rd gear rear face as a base and press 3rd gear from the countershaft assembly.

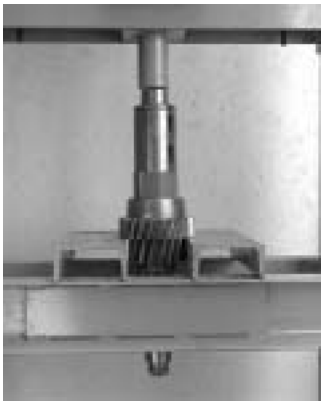

10. If damaged, remove the countershaft bearing.

NEED THESE PARTS? 226 Eaton Fuller FS-5406A parts, priced online >> Call 877-776-4600

Pro Gear and Transmission, Inc | www.progearandtransmission.com | www.pgttruckparts.com
906 West Gore St, Orlando, Fl, 32805 | +1 (877)-776-4600 | +1 (407)-872191 | parts@eprogear.com

How to Assemble the FS-5306/6306/5406/6406 and FSO-6406/8406 Countershaft Assembly

Special Instructions

CAUTION: Do not heat the bearing above 275°F (136°C). If possible, use a heat lamp as the source.

WARNING: Wear safety glasses when installing snap rings.

Special Tools

Snap ring pliers

Press

Sleeve type driver

Procedure -

1. With 3rd gear splined end hub to shaft front, position the gear and shaft in the press. Press 3rd gear into place.

2. With 4th gear splined end hub to shaft rear, position the gear and shaft in the press. Press 4th gear into place.

3. Install 5th and drive gear keys on the countershaft.

4. With 5th gear long hub to shaft front, align 5th gear keyway with shaft key, position the gear and shaft in the press. Press 5th gear into place.

5. With drive gear long hub to shaft rear, align drive gear keyway with shaft key, position the gear and shaft in the press. Press the drive gear into place.

6. Install drive gear retaining snap ring in countershaft front groove.

7. Using a sleeve type driver or heat lamp and install the front countershaft bearing.

8. Using a sleeve type driver or heat lamp and install the rear countershaft bearing.

Final Check

Make sure all gears are pressed into place.

Make sure the countershaft bearings are installed.

NEED THESE PARTS? 226 Eaton Fuller FS-5406A parts, priced online >> Call 877-776-4600

Pro Gear and Transmission, Inc | www.progearandtransmission.com | www.pgttruckparts.com
906 West Gore St, Orlando, Fl, 32805 | +1 (877)-776-4600 | +1 (407)-872191 | parts@eprogear.com

How to Install the Reverse Idler Gear Assembly For All Models Except FS-5306/6306

Procedure -

1. Coat inside diameter of reverse idler with a high quality grease, and insert the spacer in the reverse idler gear.

2. On both sides of the reverse idler spacer, install the coated bearings in reverse idler gear.

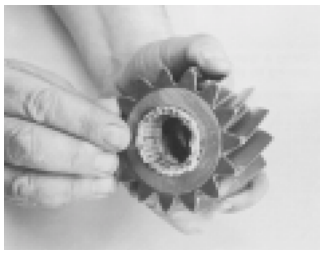

3. Use grease on reverse idler thrust washers to hold in place.

4. Position tangs of washers to align grooves of housing and install the reverse idler assembly in housing.

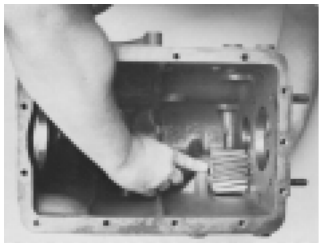

5. Install the reverse idler assembly in housing.

6. Insert the idler shaft into the case bore, line up idler shaft lock groove with lockscrew hole.

7. Position reverse idler retainer. Tighten the capscrew to the 20-25 lbs. ft. (27.1-33.8 N•m) of torque.

NEED THESE PARTS? 226 Eaton Fuller FS-5406A parts, priced online >> Call 877-776-4600

Pro Gear and Transmission, Inc | www.progearandtransmission.com | www.pgttruckparts.com
906 West Gore St, Orlando, Fl, 32805 | +1 (877)-776-4600 | +1 (407)-872191 | parts@eprogear.com

How to Install the FS-5306/6306 Reverse Idler Gear Assembly

Special Instructions

The reverse idler can be assembled in either the vertical or horizontal case position.

Lubricate the bearings and idler shaft with oil before assembly.

Procedure -

1. Insert the spacer in the reverse idler gear.

2. On either side of the reverse idler spacer, install the bearings.

3. Use grease on the reverse idler thrust washers to hold in place.

4. Position washer tangs to align housing grooves.

5. Install the reverse idler assembly in housing.

6. Insert the idler shaft into the case bore, line up shaft notch with case notch. Do not install the shaft all the way.

7. Install the locating ball.

8. Drive the shaft into position.

Final Check

Make sure the idler gear rotates freely.

NEED THESE PARTS? 226 Eaton Fuller FS-5406A parts, priced online >> Call 877-776-4600

Pro Gear and Transmission, Inc | www.progearandtransmission.com | www.pgttruckparts.com
906 West Gore St, Orlando, Fl, 32805 | +1 (877)-776-4600 | +1 (407)-872191 | parts@eprogear.com

How to Install the Countershaft Assembly

Procedure -

1. Insert idler shaft through case and idler gear bearings. Line up idler shaft lock groove with lockscrew hole and install capscrew, and reverse idler retainer and tighten the capscrew to the recommended torque.

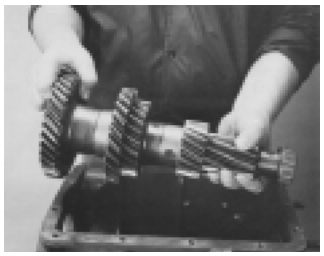

2. Carefully lower countershaft into case.

3. Turn transmission case on end. Position countershaft assembly into front bearing race.

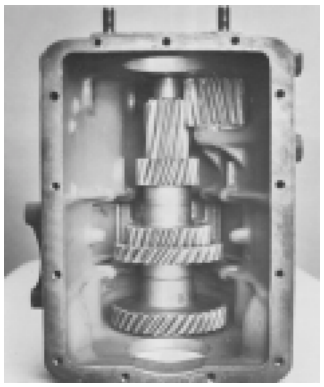

4. Install countershaft rear bearing race into case.

5. Temporarily install new shims over countershaft rear bearing cup.

6. Install countershaft rear bearing cover and four capscrews. Tighten capscrews to recommended torque.

7. Rotate countershaft to seat bearings and races. Position dial indicator as shown, lift countershaft to measure end play.

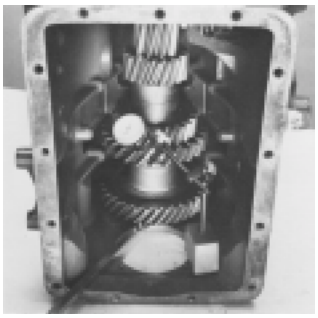

NEED THESE PARTS? 226 Eaton Fuller FS-5406A parts, priced online >> Call 877-776-4600

Pro Gear and Transmission, Inc | www.progearandtransmission.com | www.pgttruckparts.com
906 West Gore St, Orlando, Fl, 32805 | +1 (877)-776-4600 | +1 (407)-872191 | parts@eprogear.com

8. Add shims for more end play and remove shims for less end play.

   Note: Once end play is correct remove bearing cover and apply a light coat of Loctite 510 to face of retainer and both sides of shims. Coat threads of cap-screws with Loctite 262 and re-torque.

   End Play by Model

Model	Countershaft End Play
FS-4X05	.002-.008 in (0.050-0.20 mm min)
FS-5205	.002-.008 in (0.050-0.20 mm min)
FS-6205/6305	.006-.010 (0.15-0.25 mm min)
FS-5306/6306	.006-.010 (0.15-0.25 mm min)
FS-5406/6406	.006-.010 (0.15-0.25 mm min)
FSO-8406	.006-.010 (0.15-0.25 mm min)

9. If fill plug and drain plugs were removed, coat threads of plugs with Loctite 262 and install to proper recom-mended torque setting.

NEED THESE PARTS? 226 Eaton Fuller FS-5406A parts, priced online >> Call 877-776-4600

Pro Gear and Transmission, Inc | www.progearandtransmission.com | www.pgttruckparts.com
906 West Gore St, Orlando, Fl, 32805 | +1 (877)-776-4600 | +1 (407)-872191 | parts@eprogear.com

How to Install the Mainshaft Assembly

Special Instructions

The countershaft must be installed first.

Make sure the synchronizer cups on the mainshaft front end stay in position as the mainshaft is lowered into the case.

Top of the rear bearing cover is marked for proper installation.

Setting end play is done in the vertical position.

When setting end play the rear bearing cover, yoke and output shaft nut will be installed, removed, and installed again.

After end play is correct, apply a light coat of Eaton/ Fuller sealant #71233 or equivalent to both sides of the shims, case, and cover before assembly.

Special Tools

Sling and hoist

Flanged driver

Dial indicator

Procedure -

1. Using a sling around the mainshaft.
2. Carefully lower the mainshaft assembly into the case while guiding the output shaft through the rear case bore.

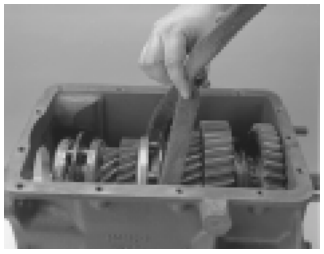

3. Remove the sling and place synchronizer in neutral.
4. Coat output shaft bearing cover oil seal outer diameter with Eaton/Fuller Sealant #71217 or equivalent.

5. If removed, install the oil seal with flanged driver.
6. If removed, install output shaft bearing race.
7. Temporarily position shims on the rear bearing mounting surface.

NEED THESE PARTS? 226 Eaton Fuller FS-5406A parts, priced online >> Call 877-776-4600

Pro Gear and Transmission, Inc | www.progearandtransmission.com | www.pgttruckparts.com
906 West Gore St, Orlando, Fl, 32805 | +1 (877)-776-4600 | +1 (407)-872191 | parts@eprogear.com

8. Position the rear bearing cover over the shims.

9. Install the retaining nuts and tighten to 60-70 lbs. ft. (81.3-94.9 N•m) of torque.

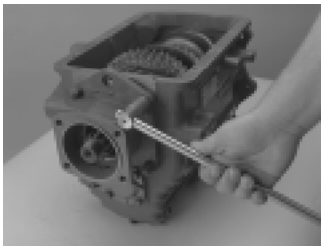

10. Make sure the mainshaft rotates freely.

Final Check

Make sure nuts are properly torqued.

Make sure the output shaft rotates.

Make sure to set end play, refer to Setting End Play Procedure For All Models Except FS-5205 on page 117 or Setting End Play Procedure For FS-5205 on page 119.

NEED THESE PARTS? 226 Eaton Fuller FS-5406A parts, priced online >> Call 877-776-4600

Pro Gear and Transmission, Inc | www.progearandtransmission.com | www.pgttruckparts.com
906 West Gore St, Orlando, Fl, 32805 | +1 (877)-776-4600 | +1 (407)-872191 | parts@eprogear.com

How to Install the Input Shaft Assembly

Special Tools

Sleeve type driver

Flanged driver

Procedure -

1. Using the proper size sleeve type driver, install the front tapered bearing on the input shaft.

2. Install the input shaft by aligning the clutching teeth on the 5th-6th speed synchronizer and input shaft clutching teeth.

3. Coat the outer diameter of the front bearing cover oil seal with a light coat of Loctite #510. Install the oil seal with a flanged driver.

4. Install a new input shaft bearing race in the front bearing cover.

5. Install the front bearing cover and gasket, align the cover and gasket with the six capscrew holes in the case. Install the six capscrews and tighten to the recommended torque.

   Note: The top of the front bearing cover is marked "TOP" for proper installation.

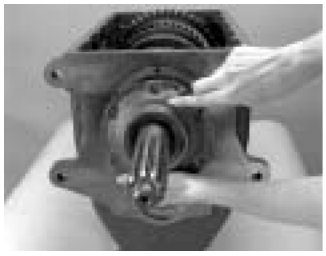

NEED THESE PARTS? 226 Eaton Fuller FS-5406A parts, priced online >> Call 877-776-4600

Pro Gear and Transmission, Inc | www.progearandtransmission.com | www.pgttruckparts.com
906 West Gore St, Orlando, Fl, 32805 | +1 (877)-776-4600 | +1 (407)-872191 | parts@eprogear.com

6. Install the speedometer drive or rotor on the output shaft.

NEED THESE PARTS? 226 Eaton Fuller FS-5406A parts, priced online >> Call 877-776-4600

Pro Gear and Transmission, Inc | www.progearandtransmission.com | www.pgttruckparts.com
906 West Gore St, Orlando, Fl, 32805 | +1 (877)-776-4600 | +1 (407)-872191 | parts@eprogear.com

Setting End Play Procedure For All Models Except FS-5205

Special Instructions

Setting end play is done in a vertical position.

When setting end play the rear bearing cover, yoke and output shaft nut will be installed, removed, and installed again.

After end play is correct, apply a light coat of Eaton/Fuller sealant #71233 or equivalent to both sides of the shims, case, and cover before assembly.

Special Tools

Dial indicator

Procedure -

1. Place transmission in a vertical position with front end down.

2. Temporarily install the yoke and output shaft nut. For part number 21937, tighten nut to 300-350 lbs. ft. (406-475 N•m) of torque. For part number 4304690, tighten nut to 500 lbs. ft. (678 N•m) of torque.

3. Rotate the output shaft and mainshaft six (6) times clockwise and six (6) times counterclockwise to seat bearings and races.

4. Position the dial indicator on the output shaft end.

5. Pry up on the output shaft to measure the end play. End play must be set per chart.

End Play by Model

Model	Mainshaft End Play
FS-4X05	.008-.012 in (0.20-0.30 mm)
FS-5205	.008-.012 in (0.20-0.30 mm)
FS-6205/6305	.006-.010 in (0.15-0.25 mm)
FS-5306/6306	.006-.010 in (0.15-0.25 mm)
FS-5406/6406	.006-.010 in (0.15-0.25 mm)
FSO-8406	.006-.010 in (0.15-0.25 mm)

6. End play must be set per table.

7. Remove shims for less end play, add shims for more end play.

8. Remove output shaft nut, yoke and rear bearing cover, coat the shims.

NEED THESE PARTS? 226 Eaton Fuller FS-5406A parts, priced online >> Call 877-776-4600

Pro Gear and Transmission, Inc | www.progearandtransmission.com | www.pgttruckparts.com
906 West Gore St, Orlando, Fl, 32805 | +1 (877)-776-4600 | +1 (407)-872191 | parts@eprogear.com

9. Position shims and rear bearing cover on case, rear bearing cover top is marked for proper positioning.

10. Install the retaining nuts, tighten to 60-70 lbs. ft. (81.3-94.9 N•m) of torque.

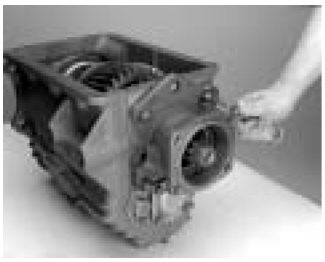

Final Check

Make sure nuts are properly torqued.

Make sure the output shaft rotates.

Make sure end play is within specification.

NEED THESE PARTS? 226 Eaton Fuller FS-5406A parts, priced online >> Call 877-776-4600

Pro Gear and Transmission, Inc | www.progearandtransmission.com | www.pgttruckparts.com
906 West Gore St, Orlando, Fl, 32805 | +1 (877)-776-4600 | +1 (407)-872191 | parts@eprogear.com

Setting End Play Procedure For FS-5205

Special Instructions

Setting end play is done in both the horizontal and vertical position.

When setting end play the front bearing cover, rear bearing cover, yoke and output shaft nut will be installed, removed, and installed again.

After end play is correct, apply a light coat of Eaton/Fuller sealant #71233 or equivalent to both sides of the shims.

Special Tools

Feeler gages

Dial indicator

Procedure -

1. Loosen the front bearing cover capscrews to 30 lbs. in. (3.4 N•M) of torque.

2. At the capscrew locations, use two feeler gages to record the gap between the front bearing cover and the case.

3. Average the two recorded measurements and add 0.016. This total gives you a shim pack thickness to start the end play measurement. Combine the shims to equal the total shim pack measurement.

4. Remove the front bearing cover and coat the shim pack.

5. Position shims and front bearing cover on case.

6. Install the retaining nuts, tighten to 15-25 lbs. ft. (20.3-27.1 N•m) of torque.

7. Place the transmission in the vertical position.

8. Temporarily install the yoke and output shaft nut. For part number 21937, tighten nut to 300-350 lbs. ft. (406-475 N•m) of torque. For part number 4304690, tighten nut to 500 lbs. ft. (678 N•m) of torque.

9. Rotate the output shaft and mainshaft six (6) times clockwise and six (6) times counterclockwise to seat bearings and races.

10. Position the dial indicator on the output shaft end.

NEED THESE PARTS? 226 Eaton Fuller FS-5406A parts, priced online >> Call 877-776-4600

Pro Gear and Transmission, Inc | www.progearandtransmission.com | www.pgttruckparts.com
906 West Gore St, Orlando, Fl, 32805 | +1 (877)-776-4600 | +1 (407)-872191 | parts@eprogear.com

11. Pry up on the output shaft to measure the end play.

12. End play must be set per table.

End Play by Model

Model	Mainshaft End Play
FS-4205	.008-.012 in (0.20-0.30 mm)
FS-5205	.008-.012 in (0.20-0.30 mm)
FS-6205/6305	.006-.010 in (0.15-0.25 mm)
FS-5306/6306	.006-.010 in (0.15-0.25 mm)
FS-5406/6406	.006-.010 in (0.15-0.25 mm)
FSO-8406	.006-.010 in (0.15-0.25 mm)

13. Remove shims for less end play, add shims for more end play.

14. After the correct end play is set, remove the front bearing cover and shims. Coat both sides of the shims with a light coat of Loctite #510 or equivalent.

15. Position the shims and the front bearing cover.

16. Install the cover capscrews. Tighten to 15-20 lbs. ft. (20.3-27.1 N•m) of torque.

Final Check

Make sure nuts and capscrews are properly torqued.

Make sure the output shaft rotates.

NEED THESE PARTS? 226 Eaton Fuller FS-5406A parts, priced online >> Call 877-776-4600

Pro Gear and Transmission, Inc | www.progearandtransmission.com | www.pgttruckparts.com
906 West Gore St, Orlando, Fl, 32805 | +1 (877)-776-4600 | +1 (407)-872191 | parts@eprogear.com

NEED THESE PARTS? 226 Eaton Fuller FS-5406A parts, priced online >> Call 877-776-4600

Copyright Eaton Corporation, 2012. Eaton hereby grant their customers, vendors, or distributors permission to freely copy, reproduce and/or distribute this document in printed format. It may be copied only in its entirety without any changes or modifications. THIS INFORMATION IS NOT INTENDED FOR SALE OR RESALE, AND THIS NOTICE MUST REMAIN ON ALL COPIES.

Note: Features and specifications listed in this document are subject to change without notice and represent the maximum capabilities of the software and products with all options installed. Although every attempt has been made to ensure the accuracy of information contained within, Eaton makes no representation about the completeness, correctness or accuracy and assumes no responsibility for any errors or omissions. Features and functionality may vary depending on selected options.

For spec'ing or service assistance, call 1-800-826-HELP (4357) or visit www.eaton.com/roadranger. In Mexico, call 001-800-826-4357.

Roadranger: Eaton and trusted partners providing the best products and services in the industry, ensuring more time on the road.

Eaton Corporation
Vehicle Group
P.O. Box 4013
Kalamazoo, MI 49003 USA
800-826-HELP (4357)
www.eaton.com/roadranger

Printed in USA

NEED THESE PARTS? 226 Eaton Fuller FS-5406A parts, priced online >> Call 877-776-4600

Powering Business Worldwide

BACKED BY Roadranger SUPPORT

Pro Gear and Transmission, Inc | www.progearandtransmission.com | www.pgttruckparts.com
906 West Gore St, Orlando, Fl, 32805 | +1 (877)-776-4600 | +1 (407)-872191 | parts@eprogear.com