Chelsea PTO 447 Parts Manual

Pro Gear and Transmission presents Chelsea 447 Series PTO parts manual to assist in identifying the parts for your Chelsea Power Take Off unit.

If you need any assistance identifying the correct Power Take Off unit for your truck and equipment, contact your Chelsea replacement part specialists at Pro Gear and Transmission.

Pro Gear stocks every part for your Parker Chelsea PTO including: PTO housings, mounts, driveshafts, gears, bearings, gaskets, cable shift cover assembly, post and plate assembly, brackets, stud kits, seal kits, lever control assembly, air shift cover assembly, direct mount pump conversion kits, stud kits including English and metric references, CAT D&H parts and much more.

Pro Gear Transmission has same day shipping and 1000's of products in stock and ready to ship internationally for your next project.

For parts or service contact the Chelsea specialists at Pro Gear & Transmission, Inc.

1 (877) 776-4600
(407) 872-1901
parts@eprogear.com

Check Inventory | Email Us | Call Us

CLICK TO RETURN TO SITE

CHELSEA®
Parts List
442 & 489 Series

Bulletin HY25-2442-M1/US

Effective: September 15, 2012
Supersedes: HY25-2442-M1/US Dated May 2012

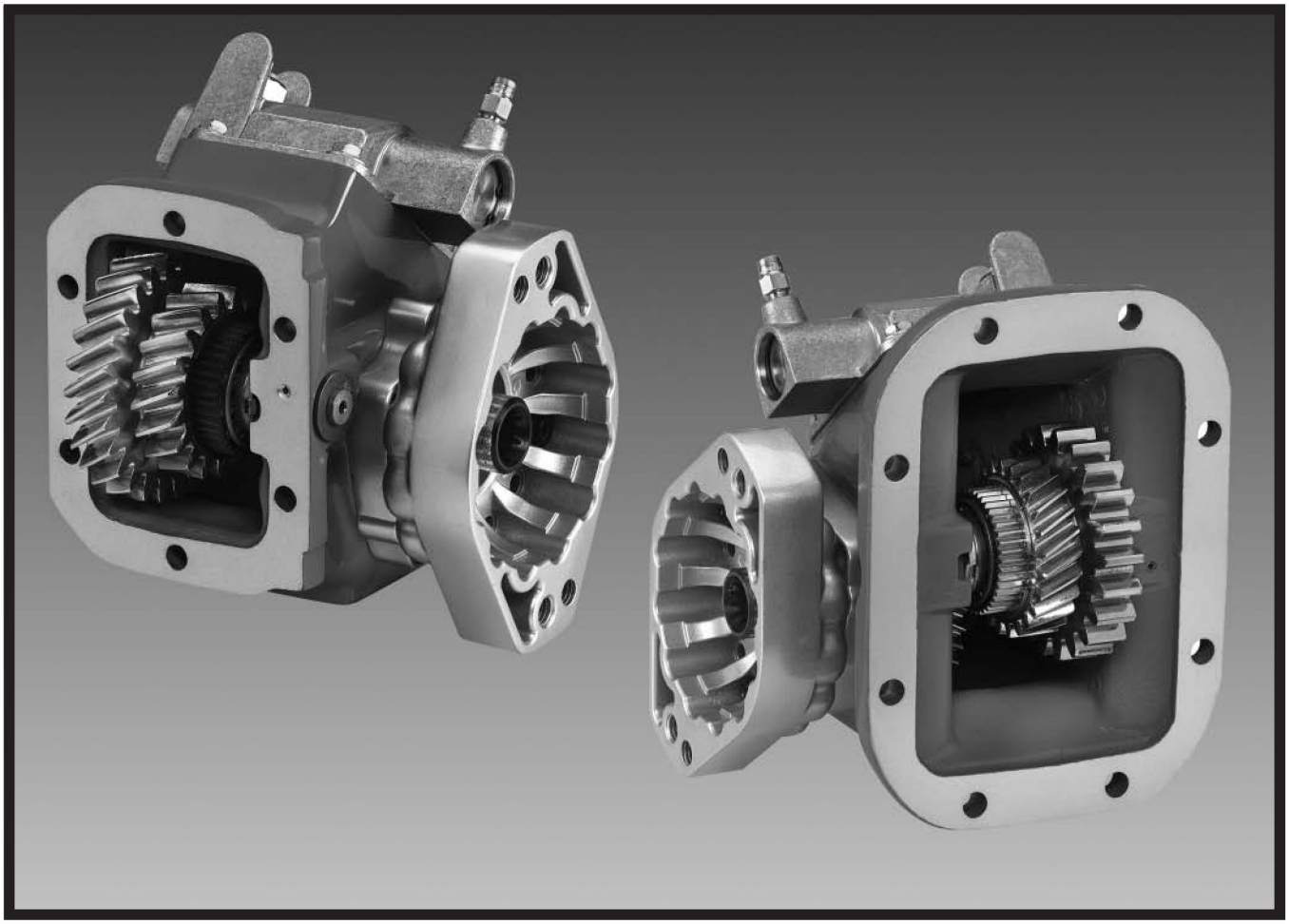

Parker | Chelsea

Pro Gear and Transmission, Inc. | 906 West Gore St, Orlando, FL 32805
+1 (877) 776-4600 | +1 (407) 872-1901
www.progearandtransmission.com | www.pgttruckparts.com | parts@eprogear.com

⚠ WARNING — User Responsibility

FAILURE OR IMPROPER SELECTION OR IMPROPER USE OF THE PRODUCTS DESCRIBED HEREIN OR RELATED ITEMS CAN CAUSE DEATH, PERSONAL INJURY AND PROPERTY DAMAGE.

This document and other information from Parker Hannifin Corporation, its subsidiaries and authorized distributors provide product or system options for further investigation by users having technical expertise.

The user, through its own analysis and testing, is solely responsible for making the final selection of the system and components and assuring that all performance, endurance, maintenance, safety and warning requirements of the application are met. The user must analyze all aspects of the application, follow applicable industry standards, and follow the information concerning the product in the current product catalog and in any other materials provided from Parker or its subsidiaries or authorized distributors.

To the extent that Parker or its subsidiaries or authorized distributors provide component or system options based upon data or specifications provided by the user, the user is responsible for determining that such data and specifications are suitable and sufficient for all applications and reasonably foreseeable uses of the components or systems.

Offer of Sale

The items described in this document are hereby offered for sale by Parker Hannifin Corporation, its subsidiaries or its authorized distributors. This offer and its acceptance are governed by the provisions stated in the "Offer of Sale".

© Copyright 2012, Parker Hannifin Corporation, All Rights Reserved

Contents

Exploded View 1
Bill of Materials 2-4
Air Control Parts (“A” Designator) 5
Shifter Kits 6
Constant Mesh Parts (“M” Designator) 7
Self Lube Parts 8
Gear Charts — 442 Series 9-11
Gear Charts — 489 Series 12
Direct Mount Pump Conversion Kits 13-14
Output Options Bills of Material 15-18
P.T.O. Housing Dimensions 19
Pump Flange & Shaft Dimensions 20
Model Number Designation 21-22
Kit Bill of Materials 23-36
Installation Sketch 37
Offer of Sale 40

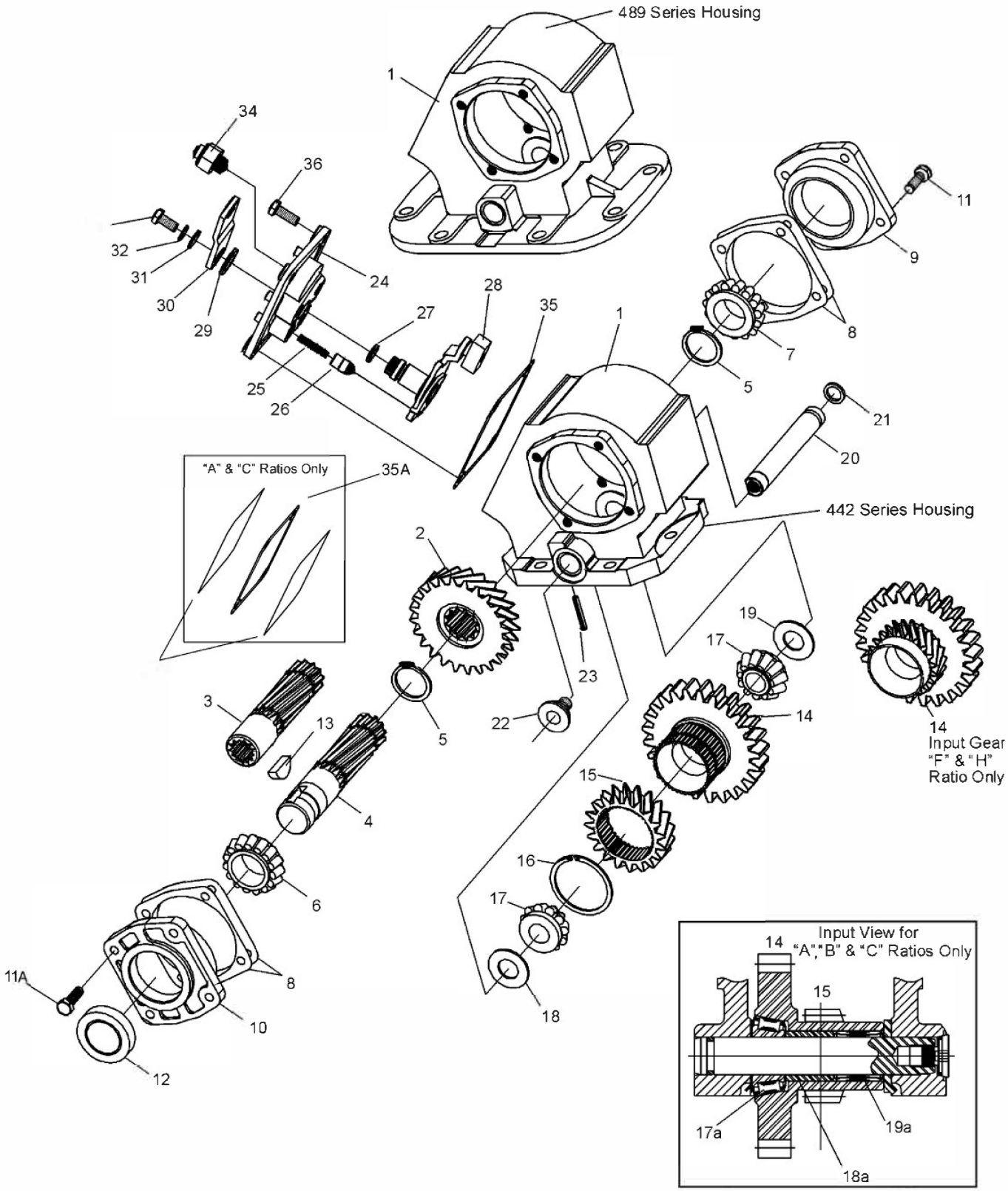
489 Series Housing
1
34
36
32
31
30
29
24
28
27
35
25
26
11
9
8
7
5
21
20
"A" & "C" Ratios Only
35A
442 Series Housing
2
19
17
23
3
13
5
22
14
14
Input Gear
"F" & "H"
Ratio Only
15
4
16
6
17
11A
8
10
18
12
Input View for
"A","B" & "C" Ratios Only
14
15
17a
19a
18a

Item	Part Number	Description	Quantity 442	Quantity 489
1	**1-P-557X**	Housing, Standard Mount (“X”, ”G” & “K”) (Includes Item 23)	1	-
	1-P-558X	Housing, Deep Mount (“Z” & “L”) (Includes Item 23)	1	-
	1-P-552X	Housing, Standard Mount (Includes Item 23)	-	1
	1-P-562X	Housing, Deep Mount (Includes Item 23)	-	1
2	See Charts, Pgs 9-12	Gear, Output	1	1
3	See Charts, Pgs 15-18	Shaft, Output Pump Mount	1	1
4	**3-P-202**	Shaft, Output (“XD”) Standard 1.250" Rd .313" KW	1	1
	3-P-978	Shaft, Output (“XD” for “B” Ratio Only) Standard 1.250" Rd .313" KW	1	-
5	**378391**	Lockring (All other shifter types Except “M”)	2	2
6	**550397**	Bearing Cone	1	1
7	**550532**	Bearing Cone	1	1
8	**22-P-127-1**	Gasket, Bearing Cap (.010")	A.R.	A.R.
	22-P-127-2	Gasket, Bearing Cap (.020")	A.R.	A.R.
	22-P-127-3	Gasket, Bearing Cap (.015")	A.R.	A.R.
	328274X	Bearing Cap Assembly, Close End	1	1
N.S	**550221**	Bearing Race	1	1
10.	**328273X**	Bearing Cap Assembly, Open End (“XD” Output)	1	1
N.S.	**550221**	Bearing Race	1	1
	See Charts, Pgs 15-18	Bearing Cap Assembly, Pump Mounts	1	1
11	**378447-6**	Capscrew, Hex Head (.312" - 18 x 1.00") (Closed Cap Side)	4	4
11A	**378447-6**	Capscrew, Socket Head (.312" - 18 x 1.00") (“XD” Output)	4	4
12	**28-P-216**	Oil Seal, “XD” Output	1	1
	See Charts, Pgs 15-18	Oil Seal	1	1
13	**500007-29**	Key, Woodruff (“XD” Output)	1	1
14	See Charts, Pgs 9-12	Gear, Input	1	1
15	See Charts, Pgs 9-12	Gear, Input Ratio	1	1
16	**379522**	Lockring	1	1
17	**550439**	Bearing Cone	2	2
17A	**561006**	Bearing Cone, Tapered (“A”, “B” & “C” Only)	1	1
18A	**14-P-75**	Spacer, Input Bearing (“A”, “B” & “C” Only)	1	1
19A	**550890**	Bearing, Needle Roller (“A”, “B” & “C” Only)	1	1
18	**14-P-73-1**	Spacer, Idler Gear (.149" - .151")	A.R.	A.R.
	14-P-73-2	Spacer, Idler Gear (.152" - .154")	A.R.	A.R.
	14-P-73-3	Spacer, Idler Gear (.155" - .157")	A.R.	A.R.
19	**31-P-102**	Thrust Washer, Bearing	1	1
20	**9-P-88**	Shaft, Idler Standard	1	1
	9-P-89	Shaft, Idler Pressure Lube (“P”)	1	1
21	**28-P-191**	O-Ring	1	1
22	**379672**	Plug, O-Ring w/Socket Face (NWD Plug)	1	1
23	**500597-14**	Roll Pin, Deep Mount (1" Long)	1	1
	500597-16	Roll Pin, Standard Mount (1.125" Long)	1	1
		CABLE CONTROL COVER ASSEMBLIES		
		Ratios “Q”, “W” & “X”		
	329119-1X	Shifter Cover Ass’y, Wire Control (Ass’y 3 & 6)	1	1
	329119-2X	Shifter Cover Ass’y, Wire Control (Ass’y 4 & 5)	1	1
		Ratios “F”, “H”, “L”, “R”, “S” & “U”		
	329121-1X	Shifter Cover Ass’y, Wire Control (Ass’y 3 & 6)	1	1
	329121-2X	Shifter Cover Ass’y, Wire Control (Ass’y 4 & 5)	1	1
		Ratios “A”, “B” & “C”		
	329271-1X	Shifter Cover Assembly, Wire Control (Ass’y 3 & 6)	1	1
	329271-2X	Shifter Cover Assembly, Wire Control (Ass’y 4 &5)	1	1

N.S. — Not Shown A.R.—As Required

See Pages 23-36 for Kit Bill of Materials

Continued on Next Page

Item	Part Number	Description	Quantity 442	Quantity 489
24	**34-P-39**	Cover Plate, Shifter - Constant Mesh	1	1
	34-P-74	Cover Plate, Shifter	1	1
25	**37-P-19**	Spring	1	1
26	**63-P-16**	Poppet Pin	1	1
27	**28-P-191**	O-Ring	1	1
		Ratios “Q” & “W” & “X”		
28	**329118-1X**	Post and Plate Assembly, (Ass’y 3 & 6)	1	1
28	**329118-2X**	Post and Plate Assembly, (Ass’y 4 & 5)	1	1
28	**329120-1X**	Post and Plate Assembly, (Ass’y 3 & 6)	1	1
28	**329120-2X**	Post and Plate Assembly, (Ass’y 4 & 5)	1	1
		Ratios “A”, “B” & “C”		
28	**329265-1X**	Post and Plate Assembly, (Ass’y 3 & 6)	1	1
28	**329265-2X**	Post and Plate Assembly, (Ass’y 4 & 5)	1	1
29	**378004**	Flat Washer	1	1
30	**51-P-22**	Shifter Lever	1	1
31	**500365-22**	Flat Washer	1	1
32	**500356-10**	Lockwasher	1	1
33	**500409-6**	Capscrew, Hex Head (.312" - 24 x .625")	1	1
34	**379639**	Indicator Switch, Pin Style (Normally Off)	1	1
35	**35-P-8**	Gasket, Shifter Cover	1	1
35A	**5-A-188**	Gasket, Shifter Cover (“A”, “B” & “C” Ratio Only)	1	1
35B	**35-P-8**	Gasket, Shifter Cover (“A”, “B” & “C” Ratio Only)	2	2
36	**378430-9**	Capscrew, Hex Head (.312" - 18 x .875") (Wire, Electric & Air Shift)	4	4
	378447-6	Capscrew, Hex Head (.312" - 18 x 1.000") (Wire Shift “A”, “B” & “C” Ratio)	4	4
N.S.	**68-P-2**	Name Plate	1	1
N.S.	**378422**	Drive Screw, Name Plate	2	2
		LOOSE PARTS		
		P.T.O. Mounting Kit		
	328170-76X	Mounting Kit (“X” Mounting Type)	1	-
	328170-77X	Mounting Kit (“Z” Mounting Type)	1	-
	7170-72X	Mounting Kit (“G” Metric Mounting Type)	1	-
	328170-201X	Mounting Kit (“G” Metric Mounting Type)	-	1
	328170-200X	Mounting Kit (“X” & “Z” Mounting)	-	1
	328346-10X	Cable, Wire Control (“W” Shifter)	1	1
	328380X	Parts Bag, Wire Control (“W” Shifter)	1	1
	329245X	Bracket Kit, Wire Control (“C” Shifter)	1	1

N.S. — Not Shown A.R.—As Required

Continued on Next Page

See Pages 23-36 for Kit Bill of Materials

Item	Part Number	Description	Quantity 442	Quantity 489
		AIR SHIFT INSTALLATION KIT		
	328388-37X	Air Shift Installation Kit (“A” Shifter)	1	1
	328388-47X	Air Shift Installation Kit (“P” Shifter)	1	1
	328388-48X	Air Shift Installation Kit (“Q” Shifter)	1	1
	328388-65X	Air Shift Installation Kit (“S” Shifter)	1	1
	328388-72X	Air Shift Installation Kit (“T” Shifter)	1	1
	328751-1X	Installation Kit (“C”, “H”, “W”, “X”, “Y”)	1	1
	379319	Indicator Switch Booth	1	1
	328948-6X	Gasket and Installation Instructions	1	-
	328948-8X	Gasket and Installation Instructions	-	1
	329166-12X	Electric Shift Installation Kit	1	1
	379640	Booted Connector (“V” Shifter Option)	1	1
	378414	Pressure Protection Valve (“V” Shifter Option)	1	1
	328075X	Pressure Lube Hose (“HVP” Input Gear Only)	1	-
		Service Kits		
	329202X	Indicator Switch Connector Service Kit	1	1
	329218X	Indicator Switch Service Kit	1	1
	329304X	Bearing Cap and Seal Assembly (Pressure Lube)	1	1
	See Pgs 13-14	Pump Field Conversion Kit	1	1
	328356-67X	Gasket & Seal Kit	1	1
	378391	Lockring	2	-
	328356-50X	Gasket & Seal Kit	-	1
	328356-15X	Shifter Cover Seal Kit (Wire Control)	1	1
	328356-69X	Shifter Cover Seal Kit (Wire Control “A”, “B” & “C” Ratio)	1	1
	328356-71X	Shifter Cover Seal Kit (Air Shift)	1	1
	328594-13X	Bearing and Spacer Kit (Non-Pressure Lube)	1	1
	328594-14X	Bearing and Spacer Kit (Pressure Lube)	1	1
	328594-15X	Bearing and Spacer Kit (Non-Pressure Lube “A”, “B” & “C” Ratio)	1	1
	328594-16X	Bearing and Spacer Kit (Pressure Lube “A”, “B” & “C” Ratio)	1	1
	329260X	Conversion Kit, 440 to 442 Series	1	-
	329261X	Conversion Kit, 440 Deep Mount to 442 Deep Mount	1	-
	329262X	Conversion Kit, 488 to 489 Series	-	1
	329263X	Conversion Kit, 488 Deep Mount to 489 Deep Mount	-	1

N.S. — Not Shown A.R.—As Required
See Pages 23-36 for Kit Bill of Materials

Continued on Next Page

Air Control Parts ("A" Designator)

442 & 489 Series

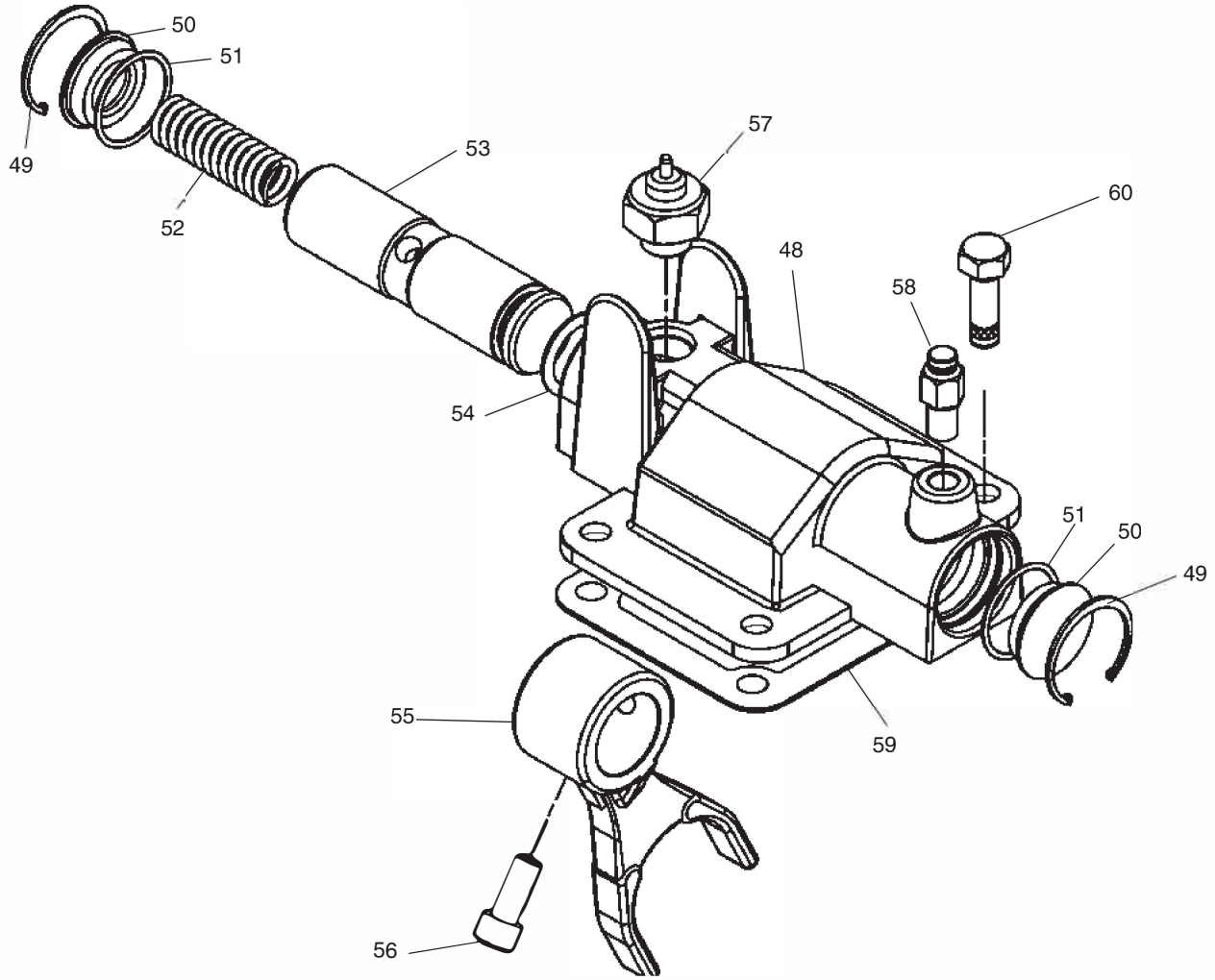

Item	Part Number	Description	Quantity 442	Quantity 489
	329361X	Shifter Cover Assembly, Air Shift (Includes Items 48-57)	1	1
48	**34-P-130**	Shifter Cover	1	1
49	**378316**	Snap Ring	2	2
50	**378315**	Cover Plug	2	2
51	**28-P-42**	O-Ring	2	2
52	**37-P-21**	Shifter Spring	1	1
53	**11-P-75**	Shaft, Shifter	1	1
	28-P-41	O-Ring	1	1
55	**32-P-180**	Shifter Fork	1	1
56	**378447-4**	Capscrew, Socket Head w/lockpatch (.312" - 18 x .750")	1	1
57	**379639**	Indicator Switch (Normally OFF)	1	1
58	**379904**	Push Connect, for 1/4" tubing	1	1
	35-P-8	Gasket, Shifter Cover	1	1
	378430-8	Capscrew, Hex Head (.312" - 18 x .875")	4	4
		AIR SHIFT CONVERSION KITS		
	328390-117X	Lever or Cable to Air	1	1
	328390-119X	Lever or Cable to Electric/Air, 12V	1	1
	328390-120X	Lever or Cable to Electric/Air, 24V	1	1

See Pages 23-36 for Kit Bill of Materials

For P.T.O.'s ordered without the shifter (Shifter Type "H"), the kits shown below will provide all the components required to complete the assembly.

Part Number	Description	Quantity	
		442	489
329106-39X	Shifter Kit (Air Shift, "A" Shift Option)	1	1
329106-43X	Shifter Kit (Air Shift, "P" Shift Option)	1	1
329106-45X	Shifter Kit (Air Shift, "Q" Shift Option)	1	1
329106-105X	Shifter Kit (Wire Control 3 & 6, "Q", " W", "X" Ratio; "W" Shift Option)	1	1
329106-106X	Shifter Kit (Wire Control 4 & 5, "Q", " W", "X" Ratio; "W" Shift Option)	1	1
329106-107X	Shifter Kit (Wire Control 3 & 6, "Q", " W", "X" Ratio; "X" Shift Option)	1	1
329106-108X	Shifter Kit (Wire Control 4 & 5, "Q", " W", "X" Ratio; "X" Shift Option)	1	1
329106-109X	Shifter Kit (Wire Control 3 & 6, "F", "L", "R", "S", "U" Ratio; "W" Shift Option)	1	1
329106-110X	Shifter Kit (Wire Control 4 & 5, "F", "L", "R", "S", "U" Ratio; "W" Shift Option)	1	1
329106-111X	Shifter Kit (Wire Control 3 & 6, "F", "L", "R", "S", "U" Ratio; "X" Shift Option)	1	1
329106-112X	Shifter Kit (Wire Control 4 & 5, "F", "L", "R", "S", "U" Ratio; "X" Shift Option)	1	1
329106-135X	Constant Mesh Kit	1	1
329106-143X	Shifter Kit (Wire Control 3 & 6, "A", "B" & "C" Ratio; "W" Shift Option)	1	1
329106-144X	Shifter Kit (Wire Control 4 & 5, "A", "B" & "C" Ratio; "W" Shift Option)	1	1
329106-145X	Shifter Kit (Wire Control 3 & 6, "A", "B" & "C" Ratio; "X" Shift Option)	1	1
329106-146X	Shifter Kit (Wire Control 4 & 5, "A", "B" & "C" Ratio; "X" Shift Option)	1	1
329106-153X	Shifter Kit ("V" Shift Option)	1	1
329143X	Field Conversion Kit (Shifter Shaft)	1	1

See Pages 23-36 for Kit Bill of Materials

Constant Mesh Parts (“M” Designator)

442 & 489 Series

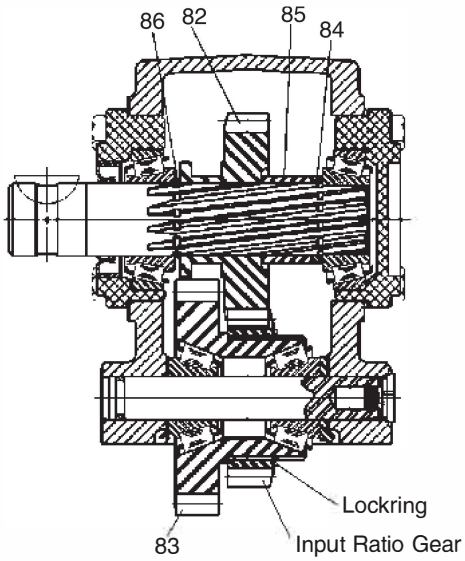

442 & 489 Series Ass’y 4 & 6

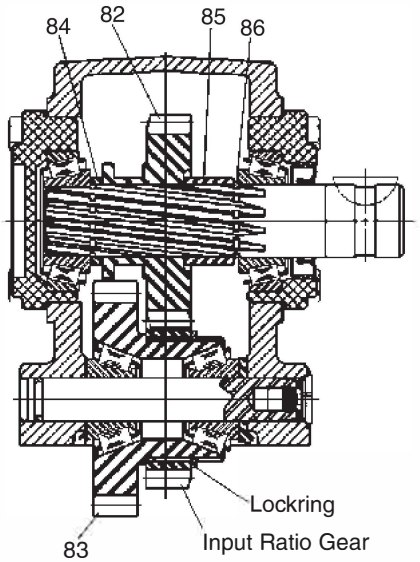

442 & 489 Series Ass’y 3 & 5

Item	Part Number	Description	Quantity	
			442	489
82	See Charts, Pg 9-12	Gear, Output	1	1
83	See Charts, Pg 9-12	Gear, Input	1	1
84	**4-P-177**	Spacer, Drive Shaft	1	1
85	**4-P-178**	Spacer, Drive Shaft	1	1
86	**378391**	Lockring (Shifter Type “M”)	1	1
N.S.	**34-P-39**	Cover Plate, Shifter	1	1
N.S.	**35-P-8**	Gasket, Shifter Cover	1	1
N.S.	**378430-6**	Capscrew, Hex Head (.312" - 18 x .625")	4	4

N.S.— Not Shown

NOTE: Pump must rotate in direction of arrow

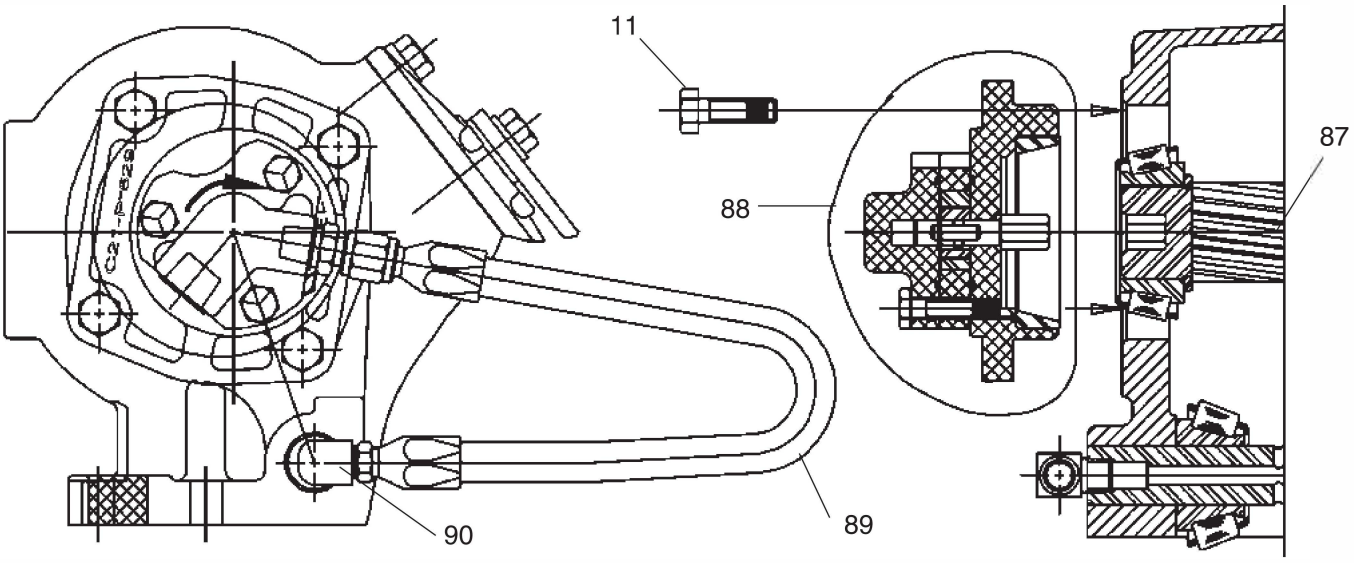

NOTE: Install Street Elbow into idler shaft before installing idler shaft

Pump assembly as shown is for “Q”, “W” and “X” Ratios.
Rotate as needed for “A”, “C”, “F”, “H”, “L”, “R”, “S” and “U” Ratios.

Item	Part Number	Description	Quantity	
			442	489
11	**378430-10**	Capscrew, Hex Head (.312" - 18 x 1.00")	4	4
87	**3-P-857**	Shaft, Output (“LD” Output)	1	1
	3-P-858	Shaft, Output (“LA”, “LB”, “LC”, “LE”, “LF” Output)	1	1
88	**329091X**	Lube Pump & Bearing Cap Assembly	1	1
89	**329092X**	Pressure Lube Hose Assembly	1	1
90	**500841-1**	Street Elbow, 90°	1	1

See Pages 23-36 for Kit Bill of Materials

Input Gear Chart — 442 Series

Model Number	Part Number	Gear Type	No. Teeth Input Gear	No. Teeth Ratio Gear
442**AB	5-P-1001	SPUR	19	
442**AC	5-P-1002	SPUR	19	
442**AG	5-P-1003	SPUR	22	
442**AH	5-P-1004	SPUR	22	
442**AL **(OBS)**	5-P-1005	SPUR	22	
442**AP	5-P-1006	Left Helix	21	
442**AQ	5-P-1007	Left Helix	21	
442**AR	5-P-1008	Left Helix	21	
442**AW	5-P-1009	Left Helix	22	
442**AX	5-P-1010	Left Helix	22	
442**BA	5-P-1011	Left Helix	23	
442**BC	5-P-1012	Left Helix	18	
442**BE **(OBS)**	5-P-1013	SPUR	27	
442**BG	5-P-1015	Left Helix	23	
442**BH	5-P-1016	Right Helix	25	
442**BJ	5-P-1017	Left Helix	25	
442**BK	5-P-1018	Left Helix	23	
442**BL	5-P-1019	Right Helix	22	
442**BM	5-P-1020	Left Helix	22	
442**BN	5-P-1021	Left Helix	22	
442**BP	5-P-1022	Right Helix	26	
442**BQ	5-P-1023	Left Helix	25	
442**BR	5-P-1024	Right Helix	26	
442**BS	5-P-1025	Left Helix	26	
442**BU **(OBS)**	5-P-1026	SPUR	33	
442**BY	5-P-1027	Right Helix	26	
442**BZ	5-P-1028	Left Helix	26	
442**CB	5-P-1029	Left Helix	25	
442**CD	5-P-1031	Left Helix	27	
442**CM **(OBS)**	5-P-1035	SPUR	22	
442**CR	5-P-1036	Left Helix	17	
442**DA	5-P-1037	SPUR	23	
442**DB	5-P-1038	SPUR		
442**DC	5-P-1039	SPUR	19	
442**DD	5-P-1040	SPUR	20	
442**DH	5-P-1041	Left Helix	21	
442**DJ	5-P-1042	Left Helix	28	
442**DK	5-P-1043	Left Helix	26	
442**DM	5-P-1045	Left Helix	17	
442**DN	5-P-1046	Left Helix	19	
442**DP	5-P-1047	Left Helix	27	
442**DQ	5-P-1048	Left Helix	20	
442**DU	5-P-1050	Left Helix	28	
442**DX	5-P-1052	Left Helix	26	
442**DY **(OBS)**	5-P-1053	Left Helix	16	
442**EA	5-P-1054	Left Helix	26	
442**EC	5-P-1055	Left Helix	36	
442**ED	5-P-1056	Left Helix		
442**EL	5-P-1075	Right Helix	30	
442**EP	5-P-1057	Right Helix		
442**EQ	5-P-1058	Left Helix	30	
442**ES	5-P-1059	Left Helix	22	
442**EV	5-P-1060	SPUR	40	

Model Number	Part Number	Gear Type	No. Teeth Input Gear	No. Teeth Ratio Gear
442**EW	5-P-1061	Left Helix	20	
442**FB **(OBS)**	5-P-1063	Left Helix	25	
442**FC	5-P-1064	Left Helix	26	
442**FE	5-P-1065	Left Helix	29	
442**FF **(OBS)**	5-P-1066	Left Helix	32	
442**FK	5-P-1067	Left Helix	21	
442**FL	5-P-1068	Left Helix	25	
442**FM	5-P-1069	SPUR	28	
442**FN	5-P-1070	Left Helix	26	
442**FP	5-P-1071	Left Helix	23	
442**FQ **(OBS)**	5-P-1072	Left Helix	21	
442**FW	5-P-1098	Left Helix	28	
442**GQ	5-P-1150	Left Helix	26	
442**GS	5-P-1152	Left Helix	29	
442**GR **(OBS)**	5-P-1157	SPUR	23	
442**HW	5-P-1235	SPUR		
442**HX	5-P-1236	SPUR	32	
442**HY	5-P-1237	Left Helix	26	
442**JA	5-P-1243	Left Helix	27	
442**IT	Assembled Without Input Gear			
442**JD	5-P-1248	Left Helix	20	
442**JG	5-P-1256	Left Helix	28	
442**JH	5-P-1257	Left Helix	29	
442**JK	5-P-1261	Left Helix	24	
442**JM	5-P-1263	Left Helix	22	
442**JP	5-P-1268	Left Helix	33	
442**JS	5-P-1310	Left Helix	20	
442**JT **(OBS)**	5-P-1313	Left Helix	19	
442**JU	5-P-1316	Left Helix	25	
442**JW	5-P-1319	Left Helix	23	
442**KC	5-P-1341	Left Helix	41	
442**KH	5-P-1343	Left Helix	32	
442**KJ	5-P-1405	Left Helix	33	
442**KL	5-P-1407	Left Helix	29	
442**KN	5-P-1383	Left Helix	27	
442**KX	5-P-1411	Left Helix	26	
	Input Gears "A" Ratio Only			
442*AAB	5-P-1279	SPUR	19	14
442*AAH	5-P-1280	SPUR	22	14
442*AAP	5-P-1282	Left Helix	21	14
442*AAR	5-P-1283	Left Helix	21	14
442*ADA	5-P-1284	SPUR	23	14
442*AES	5-P-1285	Left Helix	22	14
442*AJA	5-P-1366	Left Helix	27	14
	Input Gears "B" Ratio Only			
442*BHV	5-P-1358	SPUR	24	14
442*BAH	5-P-1418	SPUR	22	14
	Input Gears "C" Ratio Only			
442*CAB	5-P-1286	SPUR	19	17
442*CAH	5-P-1287	SPUR	22	17
442*CJA	5-P-1368	Left Helix	27	17
442*CAP	5-P-1289	Left Helix	21	17
442*CAR	5-P-1290	Left Helix	21	17
442*CDA	5-P-1291	SPUR	23	17
442*CES	5-P-1292	Left Helix	22	17
	Input Gears "F" Ratio Only			
442*FAB	5-P-1076	SPUR	19	21
442*FAH	5-P-1077	SPUR	22	21
442*FAP	5-P-1079	Left Helix	21	21

Continued on Next Page

Input Gear Chart — 442 Series (Continued)

Model Number	Part Number	Gear Type	No. Teeth Input Gear	No. Teeth Ratio Gear
442*FAR	5-P-1080	Left Helix	21	21
442*FBC	5-P-1081	Left Helix	18	21
442*FBG	5-P-1082	Left Helix	23	21
442*FBM	5-P-1083	Left Helix	22	21
442*FBQ	5-P-1084	Left Helix	25	21
442*FDA	5-P-1085	SPUR	23	21
442*FDJ	5-P-1086	Left Helix	28	21
442*FDN	5-P-1087	Left Helix	19	21
442*FDU	5-P-1088	Left Helix	28	21
442*FEC	5-P-1089	Left Helix	36	21
442*FED	5-P-1090	Left Helix		21
442*FEP	5-P-1091	Right Helix		21
442*FES	5-P-1092	Left Helix	22	21
442*FET	5-P-1093	Left Helix	19	21
442*FEV	5-P-1094	SPUR	40	21
442*FEW	5-P-1095	Left Helix	20	21

Model Number	Part Number	Gear Type	No. Teeth Input Gear	No. Teeth Ratio Gear
442*FFE	5-P-1096	Left Helix	29	21
442*FFN	5-P-1097	Left Helix	26	21
442*FGQ	5-P-1149	Left Helix	26	21
442*FGS	5-P-1151	Left Helix	29	21
442*FHV (H)	5-P-1300	SPUR	24	21
442*FJS	5-P-1311	Left Helix	20	21
442*FJT	5-P-1314	Left Helix	19	21
442*FJU	5-P-1317	Left Helix		21
442*FJW	5-P-1320	Left Helix	23	21
442*FJA	5-P-1340	Left Helix	27	21
	Input Gears "H" Ratio Only			
442*HAH	5-P-1364	SPUR	22	23
442*HDA	5-P-1365	SPUR	23	23
442*HJA	5-P-1342	Left Helix	27	23

Input Ratio Gear Chart — 442 Series

Ratio	Part Number	No. Teeth "B"
442*L	5-P-964	25
442*Q	5-P-965	19
442*R	5-P-1214	22
442*S	5-P-966	24
442*U	5-P-967	26
442*W	5-P-968	26
442*X	5-P-969	38

Output Gear Chart — 442 Series

Ratio	Part Number	No. Teeth "B"
442*A	2-P-791	39
442*B	2-P-833	39
442*C	2-P-792	37
442*F	2-P-726	37
442*H	2-P-802	
442*L	2-P-727	34
442*Q	2-P-559	24
442*R	2-P-559	24
442*S	2-P-637	22
442*U	2-P-560	20
442*W	2-P-561	17
442*X	2-P-728	21

Geared Adapter Gears — 442 Series

Model Number	Part Number	Gear Type	No. Teeth	Adapter Input Gear	Part Number	Gear Type	No. Teeth
442**GX	5-P-1183	Right Helix	21	AP	5-P-1006	Left Helix	21
442**GY	5-P-1184	Right Helix	21	AR	5-P-1008	Left Helix	21
442**GZ	5-P-1185	Right Helix	22	AW	5-P-1009	Left Helix	22
442**HA	5-P-1186	Left Helix	22	AX	5-P-1010	Right Hand	22
442**HB	5-P-1187	Right Helix	23	BG	5-P-1015	Left Helix	23
442**HC	5-P-1188	Right Helix	22	BM	5-P-1020	Left Helix	22
442**HD	5-P-1189	Right Helix	25	CB	5-P-1029	Left Helix	25
442**HE	5-P-1190	Right Helix	27	CD	5-P-1031	Left Helix	27
442**HF	5-P-1191	Right Helix	17	DM	5-P-1045	Left Helix	17
442**HG	5-P-1192	Right Helix	19	DN	5-P-1046	Left Helix	19
442**HH	5-P-1193	Right Helix	28	DU	5-P-1050	Left Helix	28
442**HJ	5-P-1194	Right Helix	36	EC	5-P-1055	Left Helix	36
442**HK	5-P-1195	Right Helix	34	ED	5-P-1056	Left Helix	
442**HL	5-P-1196	Right Helix	22	ES	5-P-1059	Left Helix	22
442**HM	5-P-1197	Right Helix	20	EW	5-P-1061	Left Helix	20
442**HP	5-P-1199	Right Helix	26	FC	5-P-1064	Left Helix	26
442**HQ	5-P-1200	Right Helix	29	FE	5-P-1065	Left Helix	29
442**HR	5-P-1201	Right Helix	26	FN	5-P-1070	Left Helix	26
442**JB	5-P-1244	Right Helix	26	HY	5-P-1237	Left Helix	26
442**JC	5-P-1247	Right Helix	27	DJA	5-P-1243	Left Helix	27
442**JE	5-P-1249	Right Helix	20	JD	5-P-1248	Left Helix	20
442**JL	5-P-1262	Right Helix	24	JK	5-P-1261	Left Helix	24
442**JN	5-P-1264	Right Helix	22	JM	5-P-1263	Left Helix	22
442**JQ	5-P-1269	Right Helix	33	JP	5-P-1268	Left Helix	33

Continued on Next Page

Geared Adapter Gears — 442 Series

Model Number	Part Number	Gear Type	No. Teeth	Adapter Input Gear	Part Number	Gear Type	No. Teeth
442**JY	5-P-1312	Right Helix	20	JS	5-P-1310	Left Helix	20
442**KA	5-P-1318	Right Helix	25	JU	5-P-1316	Left Helix	25
442**KB	5-P-1321	Right Helix	23	JW	5-P-1319	Left Helix	23
442**KK	5-P-1406	Right Helix	33	KJ	5-P-1405	Left Helix	33
442**KM	5-P-1408	Right Helix	29	KL	5-P-1407	Left Helix	29
442**KP	5-P-1384	Right Helix	27	KN	5-P-1383	Left Helix	27

* Input gear meshes with the transmission
** Ratio gear meshes with the P.T.O. Output Gear
NOTE: The unique design of the 447 Series input gear requires that the spacers used to shim the input bearings be placed opposite of the normal position found on the 442 and 489 series.

Input Gear Chart — 489 Series

Model Number	Part Number	Gear Type	No. Teeth Input Gear	No. Teeth Ratio Gear
489**AB	5-P-1001	Spur	19	
489**AH	5-P-1004	Spur	22	
489**AR	5-P-1008	Left Helix	21	
489**BG	5-P-1015	Left Helix	23	
489**DA	5-P-1037	Spur	23	
489**DU	5-P-1050	Left Helix	28	
489**EV	5-P-1060	Spur	40	
489**DB	5-P-1038	Spur	39	
489**CR	5-P-1036	Left Helix		
489**HW	5-P-1235	Spur		
489**HX	5-P-1236	Spur	32	
489*AAB	5-P-1279	Spur	19	14
489*AAH	5-P-1280	Spur	22	14
489*AAR	5-P-1283	Left Helix	21	14
489*ADA	5-P-1284		23	14

Model Number	Part Number	Gear Type	No. Teeth Input Gear	No. Teeth Ratio Gear
489*CAB	5-P-1286	Spur	19	17
489*CAH	5-P-1287	Spur	22	17
489*CAR	5-P-1290	Left Helix	21	17
489*CDA	5-P-1291	Spur	23	17
489*FAB	5-P-1076	Spur	19	21
489*FAH	5-P-1077	Spur	22	21
489*FAR	5-P-1080	Left Helix	21	21
489*FBG	5-P-1082	Left Helix	23	21
489*FDA	5-P-1085	Spur	23	21
489*FDU	5-P-1088	Left Helix	28	21
489*FEV	5-P-1094	Spur	40	21
489*HAH	5-P-1364	Spur	22	23
489*HDA	5-P-1365	Spur	23	23

Ratio Gear Chart — 489 Series

Input Ratio Gear Chart — 489 Series

Ratio	Part Number	No. Teeth
489*A	See Chart Above	
489*C	See Chart Above	
489*F	See Chart Above	
449*H	See Chart Above	
489*L	5-P-964	25
489*Q	5-P-965	19
489*R	5-P-1214	22
489*S	5-P-966	24
489*U	5-P-967	26
489*W	5-P-968	26
489*X	5-P-969	38

Output Gear Chart — 489 Series

Ratio	Part Number	No. Teeth
489*A	2-P-791	39
489*C	2-P-792	
489*F	2-P-726	37
449*H	2-P-802	35
489*L	2-P-727	34
489*Q	2-P-559	24
489*R	2-P-559	24
489*S	2-P-637	22
489*U	2-P-560	20
489*W	2-P-561	17
489*X	2-P-728	21

Direct Mount Pump Conversion Kits

442 & 489 Series

Flange Suffix	Flange Type	Shaft Type	Conversion Kit	
AA	Special for England	.982" - 6T Spline		
AF	S.A.E. “B” 2 or 4-Bolt	1.0" - 15T Spline	XD to AF	328591-30X
AK	S.A.E. “B” 2-Bolt	7/8" - 13T Spline (“B” Ratio Only)	XD to AK XD to AK	328591-28X 329436-7X
AZ	Non-Standard	1-1/4" - 14T Spline	XD to AZ	328591-70X
FF	S.A.E. “B” 2 or 4-Bolt	7/8" Rd w/1/4" Key	XD to FF	328591-29X
GA	Rotatable S.A.E. “B” 2-Bolt	● 7/8" - 13T Spline	XD to GA XR to GA RA to GA	328591-72X 328591-73X 328591-106X
GB	Rotatable S.A.E. “B” 4-Bolt	● 7/8" - 13T Spline	XD to GB XR to GB RB to GB	328591-74X 328591-75X 328591-107X
GF	S.A.E. “BB” 2 or 4-Bolt	● 1.0" - 15T Spline	XD to GF AF to GF	328591-71X 328591-108X
GH	Rotatable S.A.E. “BB” 2-Bolt	● 1.0" - 15T Spline	XD to GH RF to GH	328591-116X 328591-114X
GJ	Rotatable S.A.E. “B” 4-Bolt	● 1.0" - 15T Spline	XD to GJ RE to GJ	328591-138X 328591-114X
GK	S.A.E. “B” 2 or 4-Bolt	● 7/8" - 13T Spline	XD to GK XK to GK	328591-89X 328591-86X
GP	S.A.E. “A” Pilot 2 or 4-Bolt	● 7/8" - 13T Spline	XD to GP XP to GP	328591-90X 328591-86X
	S.A.E. “B” 2 or 4-Bolt	● 7/8" - 13T Spline	XD to GQ XQ to GQ	328591-91X 328591-86X
GR	CHELSEA SPECIAL 4-Bolt	● 7/8" - 13T Spline	XD to GR	328591-76X
GY	DIN 5462 Pump Mounting	● 7/8" - 13T Spline	XD to GY XY to GY	328591-92X 328591-89X
GZ	Non-Standard 4-Bolt	● 1-1/4" - 14T Spline	XD to GZ AZ to GZ	328591-93X 328591-88X
▸▸ LA	S.A.E. "B" 2-Bolt	7/8" - 13T Spline	AK to LA	328591-44X
▸▸ LB	S.A.E. “A” Pilot 2-Bolt	7/8" - 13T Spline	XP to LB	328591-45X
▸▸ LC	S.A.E. “B” 2 or 4-Bolt	7/8" - 13T Spline	XQ to LC	328591-46X
▸▸ LD	Similar to “XD”	1-1/4" Rd	XD to LD	
▸▸ LE	6-Bolt Rd	7/8" - 13T Spline	XN to LE	328591-47X
▸▸ LF	S.A.E. “B” 2 or 4-Bolt	7/8" - 13T Spline	XK to LF	328591-48X
RH	Rotatable S.A.E. “A” 2-Bolt	3/4" - 11T Spline	XD to RH	328591-151X

NOTE: Check Current Price Sheet for Availability of Output Options

Continued on Next Page

XR to “XK” Conversion Flange 21-P-525

● Shaft with Grease Fitting

■ Similar to Ass’y “XK” Flange Rotated 90°

▸▸ Lube Pump Option

Direct Mount Pump Conversion Kits (Cont'd) 442 & 489 Series

Flange Suffix	Flange Type	Shaft Type	Conversion Kit	
PA	Parker P2-060 Pump Mounting	7/8" - 13T Spline	XD to PA	328591-143X
PF	Parker P2-060 Pump Mounting	1.0" - 15T Spline	XD to PF	328591-142X
RA	Rotatable S.A.E. “B” 2-Bolt	7/8" - 13T Spline	XD to RA	328591-55X
			XR to RA	328591-53X
		(“B” Ratio Only)	XD to RA	329436-1X
RB	Rotatable S.A.E. “B” 4-Bolt	7/8" - 13T Spline	XD to RB	328591-56X
			XR to RB	328591-54X
		(“B” Ratio Only)	XR to RB	329436-2X
RC	Rotatable S.A.E. “A” 2-Bolt	5/8" - 9T Spline	XD to RC	328591-112X
RD	Rotatable S.A.E. “A” 2-Bolt	7/8" - 13T Spline	XD to RD	328591-113X
		(“B” Ratio Only)	XD to RD	329436-8X
RE	S.A.E. “B” 4-Bolt Rotatable	1.0" - 15T Spline	XD to RE	328591-134X
RF	Rotatable S.A.E. “B” 2-Bolt	1.0" - 15T Spline	XD to RF	328591-78X
RY	Rotatable DIN 5462	DIN 5462	XD to RY	328591-131X
SQ	S.A.E. “B” 4-Bolt	7/8" - 13T Spline	XD to SQ	328591-149X
		(“B” Ratio Only)	XD to SQ	329436-9X
XE	S.A.E. “A” 2 or 4-Bolt	5/8" - 9T Spline	XD to XE	328591-27X
XG	Non-Standard-S.A.E. “A” 2-Bolt	3/4" Rd w/3/16" Key	XD to XG	328591-10X
XJ	Non-Standard 2-Bolt	3/4" Rd	XD to XJ	328591-11X
XK	S.A.E. “B” 2 or 4-Bolt	7/8" - 13T Spline	XD to XK	328591-16X
		(“B” Ratio Only)	XD to XK	329436-3X
XL	Non-Standard 2-Bolt	7/8" - 13T Spline	XD to XL	328591-18X
		(“B” Ratio Only)	XD to XL	329436-4X
XO	S.A.E. “A” Pilot 2-Bolt	3/4" Rd w/3/16" Key	XD to XO	328591-26X
XP	S.A.E. “A” Pilot 2-Bolt	7/8" - 13T Spline	XD to XP	328591-23X
		(“B” Ratio Only)	XD to XP	329436-5X
■ XQ	S.A.E. “B” 2 or 4-Bolt	7/8" - 13T Spline	XD to XQ	328591-17X
		(“B” Ratio Only)	XD to XQ	329436-6X
XR	CHELSEA SPECIAL 4-Bolt	7/8" - 13T Spline	XD to XR	328591-52X
XV	Rd Shaft	1-1/4" w/Set Screw	XD to XV	328591-130X
XX	S.A.E Tapered Shaft	1-1/4" w/5/16" Key	XD to XX	328591-122X
XY	DIN 5462 Pump Mounting	DIN 5462	XD to XY	328591-121X

NOTE: Check Current Price Sheet for Availability of Output Options

XR to “XK” Conversion Flange 21-P-525

- ● Shaft with Grease Fitting
- ■ Similar to Ass’y “XK” Flange Rotated 90°
- ⏩ Lube Pump Option

Output Options Bill of Materials

442 & 489 Series

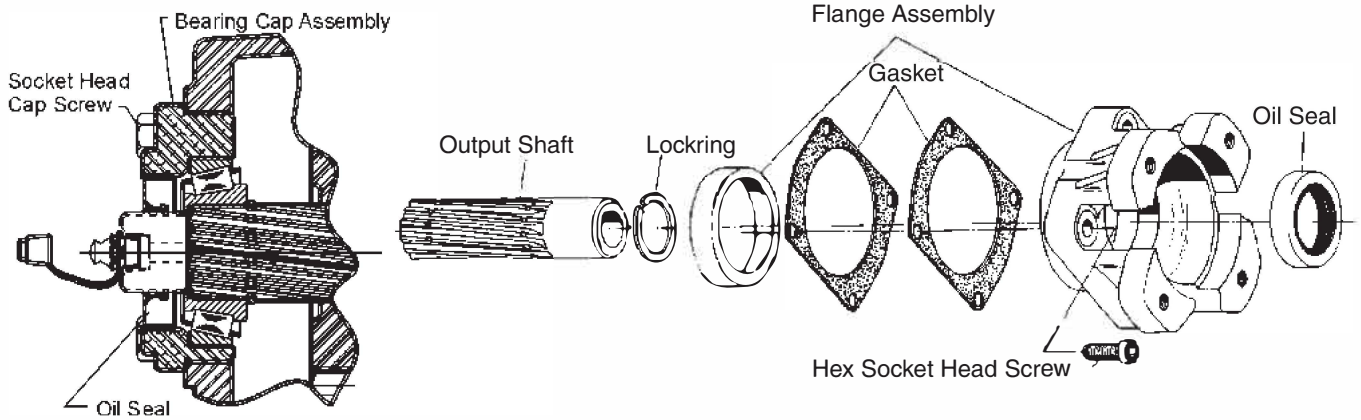

Output Flange	Part Number	Description	Qty.
AA	**3-P-862**	Output Shaft	1
	28-P-216	Oil Seal	1
	239102X	Bearing Cap Ass'y (21-P-532)	1
	378447-8	Socket Head Capscrew (.312" - 18 x 1.5")	4
AF	**3-P-854**	Output Shaft	1
	28-P-219	Oil Seal	1
	329088X	Bearing Cap Ass'y (21-P-522)	1
	378447-10	Socket Head Capscrew (.312" - 18 x 2.0")	4
AK	**3-P-282**	Output Shaft	1
	3-P-979	Output Shaft ("B" Ratio Only)	1
	28-P-216	Oil Seal	1
	328989X	Bearing Cap Ass'y (21-P-472)	1
	378447-8	Socket Head Capscrew (.312" - 18 x 1.5")	4
AZ	**3-P-844**	Output Shaft	1
	28-P-275	Oil Seal	1
	329052X	Bearing Cap Ass'y (21-P-508)	1
	378447-11	Socket Head Capscrew (.312" - 18 x 2.5")	4
FF	**3-P-851**	Output Shaft	1
	28-P-219	Oil Seal	1
	329088X	Bearing Cap Ass'y (21-P-522)	1
	378447-10	Socket Head Capscrew (.312" - 18 x 2.0")	4
(1) G*	**3-P-923X**	"GA", "GB", "GR", Shaft Assemblies	1 or
	3-P-981X	"GE" Shaft Assembly	1 or
	3-P-921X	"GF" Shaft Assemblies	1 or
	3-P-933X	"GQ", "GK", "GP" Shaft Assemblies	1 or
	3-P-938X	"GY" Shaft Assemblies	1 or
	3-P-939X	"GZ" Shaft Assemblies	1 or
	3-P-941X	"GH", "GJ" Shaft Assemblies	1
	500168-2	Lube Fitting (Zerk)	1
	379819	Grease Fitting Cap	1
	379688	Coupling Lube Pack (5/8 fl.oz)	1
	28-P-268	Rear Bearing Cap Shaft Oil Seal	1
	328273X	Rear Bearing Cap Assembly	1
	378447-6	Rear Bearing Cap Hex Head Capscrew (.312" - 18" x 1.0")	4
L*	**3-P-857**	Output Shaft ("LD")	1
	3-P-858	Output Shaft ("LA", "LB", "LC", "LF")	1
	329091X	Lube Pump & Bearing Cap Ass'y	1
	329092X	Pressure Lube Hose Ass'y	1
	500841-1	Elbow 90° Street	1
	378447-6	Hex Capscrew (.312" - 18 x 1.0")	4

Continued on Next Page

(1) NOTE: For Output Flange Information see the related flange Bills of Material:
GA=RA, GB=RB, GF=AF, GR=XR, GK=XK, GP=XP, GQ=XQ, GY=XY, GZ=AZ, GH=RF, GJ=RE & GE=XE

Output Options Bill of Materials

Output Flange	Part Number	Description	Qty.
PA	3-P-283	Output Shaft	1
	28-P-216	Oil Seal	1
	329195X	Bearing Cap Ass'y (21-P-574)	1
	21-P-661	Pump Flange	1
	378447-6	Socket Head Capscrew (.312" - 18 x 1.0")	4
	328170-207X	Capscrew Bag Kit	1
	378447-6	Socket Head Capscrew	3
PF	3-P-924	Output Shaft	1
	28-P-219	Oil Seal	1
	329264X	Bearing Cap Ass'y (21-P-629)	1
	21-P-661	Pump Flange	1
	378447-6	Socket Head Capscrew (.312" - 18 x 1.0")	4
	28-P-271	O-Ring	1
RA	3-P-283	Output Shaft	1
	3-P-980	Output Shaft ("B" Ratio Only)	1
	28-P-216	Oil Seal	1
	329195X	Bearing Cap Ass'y (21-P-574)	1
	21-P-628	Pump Flange (Ship Loose w/Unit)	1
	378447-6	Socket Head Capscrew	4
	328170-207X	Capscrew Bag Kit	1
	378170-6	Socket Head Capscrew	3
RB	3-P-283	Output Shaft	1
	3-P-980	Output Shaft ("B" Ratio Only)	1
	28-P-216	Oil Seal	1
	329195X	Bearing Cap Ass'y (21-P-574)	1
	21-P-572	Pump Flange (Ship Loose w/Unit)	1
	378447-6	Socket Head Capscrew	4
	328170-207X	Capscrew Bag Kit	1
	378170-6	Socket Head Capscrew	3
RC	3-P-800	Output Shaft	1
	28-P-216	Oil Seal	1
	329322X	Bearing Cap Ass'y (21-P-640)	1
	21-P-638	Pump Flange	1
	378447-6	Socket Head Capscrew (.312" - 18 x 1.0")	4
	328170-210X	Capscrew Bag Kit	1
	378447-4	Socket Head Capscrew (.312" - 18 x .75")	6
RE	3-P-924	Output Shaft	1
	28-P-219	Oil Seal	1
	329264X	Bearing Cap Ass'y (21-P-629)	1
	21-P-654	Pump Flange	1
	378447-6	Socket Head Capscrew (.312" - 18 x 1.0")	4
	28-P-271	O-Ring	1
RF	3-P-924	Output Shaft	1
	28-P-219	Oil Seal	1
	329264X	Bearing Cap Ass'y (21-P-629)	1
	21-P-626	Pump Flange	1
	378447-6	Socket Head Capscrew (.312" - 18 x 1.0")	7
	28-P-271	O-Ring	1
RH	3-P-1010	Output Shaft	1
	28-P-216	Oil Seal	1
	329322X	Bearing Cap Ass'y (21-P-640)	1
	21-P-638	Pump Flange (Ship Loose w/Unit)	1
	378447-6	Socket Head Capscrew	4
	328170-210X	Capscrew Bag Kit	1
	378446-4	Socket Head Capscrew	6

Continued on Next Page

Output Options Bill of Materials

Output Flange	Part Number	Description	Qty.
RY	3-P-768	Output Shaft	1
	21-P-625	Pump Flange	1
	329356X	Bearing Cap Ass'y (21-P-532)	1
	378447-8	Socket Head Capscrew (.312" - 18 x 1.5")	4
	329355-1X	Standard Loose Parts Kit	1
	379740-6	Socket Head Capscrew (M10 1.5" x .984")	3
	22-P-100	Gasket	1
	22-P-84	Gasket	1
	379231	Pipe Plug	2
XE	3-P-800	Output Shaft	1
	28-P-216	Oil Seal	1
	328328X	Bearing Cap Ass'y (21-P-161)	1
	378447-8	Socket Head Capscrew (.312" - 18 x 1.5")	4
XG	3-P-281	Output Shaft	1
	28-P-216	Oil Seal	1
	328580X	Bearing Cap Ass'y (21-P-259)	1
	378447-8	Socket Head Capscrew (.312" - 18 x 1.5")	4
XJ	3-P-284	Output Shaft	1
	28-P-216	Oil Seal	1
	328580X	Bearing Cap Ass'y (21-P-259)	1
	378447-8	Socket Head Capscrew (.312" - 18 x 1.5")	4
XK	3-P-282	Output Shaft	1
	3-P-979	Output Shaft ("B" Ratio Only)	1
	28-P-216	Oil Seal	1
	328333X	Bearing Cap Ass'y (21-P-424) & (28-P-216)	1
	378447-8	Socket Head Capscrew (.312" - 18 x 1.5")	4
XL		Output Shaft	1
		Output Shaft ("B" Ratio Only)	1
		Oil Seal	1
	328580X	Bearing Cap Ass'y (21-P-259)	1
	378447-8	Socket Head Capscrew (.312" - 18 x 1.5")	4
XO	3-P-284	Output Shaft	1
	28-P-216	Oil Seal	1
	328328X	Bearing Cap Ass'y (21-P-161)	1
	378447-8	Socket Head Capscrew (.312" - 18 x 1.5")	4
XP	3-P-282	Output Shaft	1
	3-P-979	Output Shaft ("B" Ratio Only)	1
	28-P-216	Oil Seal	1
	328328X	Bearing Cap Ass'y (21-P-161)	1
	378447-8	Socket Head Capscrew (.312" - 18 x 1.5")	4
XQ	3-P-282	Output Shaft	1
	3-P-979	Output Shaft ("B" Ratio Only)	1
	28-P-216	Oil Seal	1
	328589X	Bearing Cap Ass'y (21-P-269)	1
	378447-8	Socket Head Capscrew (.312" - 18 x 1.5")	4
XR	3-P-283	Output Shaft	1
	28-P-216	Oil Seal	1
	329194X	Bearing Cap Assembly (21-P-574)	1
	379673	Hex Shoulder Screw (.312" - 24)	4
	379063	Flat Washer	4
	328711X	Pump Mounting Kit	1
	378919	Washer	4
	500963-1	Hex Lock Nut (.312" - 24)	4

Continued on Next Page

Output Options Bill of Materials

Output Flange	Part Number	Description	Qty.
XV	3-P-202	Output Shaft	1
	28-P-216	Oil Seal	1
	3-P-978	Output Shaft (“B” Ratio Only)	1
	328273X	Bearing Cap Ass’y (21-P-418)	1
	378430-10	Hex Capscrew (.312" - 18 x 1.0")	4
	500007-29	Woodruff Key	1
	379828	Companion Flange	1
	378431-8	Set Screw	1
	378431-8	Set Screw	1
XX	3-P-766	Output Shaft	1
	28-P-216	Oil Seal	1
	378430-10	Hex Capscrew (.312" - 18 x 1.0")	4
	379111	Square Key	1
	501181	Hex Locknut (1.0" - 20)	1
XY	3-P-768	Output Shaft	1
	28-P-275	Oil Seal	1
	328234X	Bearing Cap Ass’y (21-P-614)	1
	378447-6	Socket Head Capscrew (.312" - 18 x 1.0")	4
SQ	3-P-282	Output Shaft	1
	3-P-979	Output Shaft (“B” Ratio Only)	1
	28-P-216	Oil Seal	1
	329449X	Bearing Cap Ass’y (21-P-692)	1
	378447-8	Socket Head Capscrew (.312" - 18 x 1.5")	4

P.T.O. Housing Dimensions

442 & 489 Series

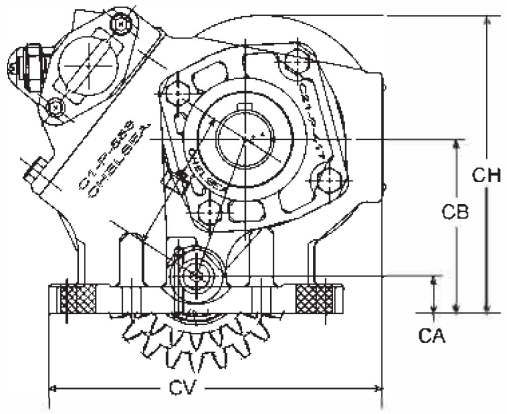

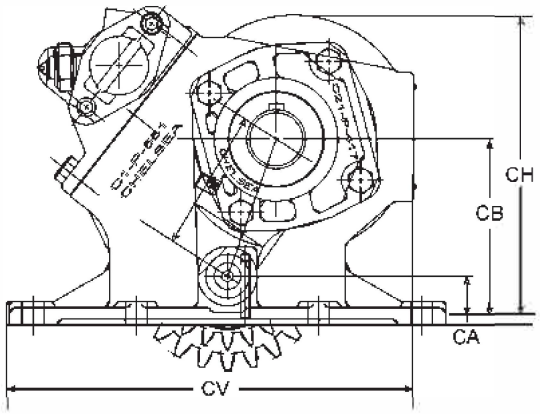

P.T.O. Series	Part Number	CA	CB	CD	CH	CV
442 Standard	1-P-557X	0.793"	3.800" (“F”,“H”,“L”,“R”,“S”,“U”) 3.701" (“Q,“W”,“X”) 3.568" (“A”,“C”)	3.317" (“F”,“H”,“L”,“R”,“S”,“U”) 3.087" (“Q”,“W”,“X”) 3.050" (“A”,“C”)	6.428"	7.000"
442 Deep Mount	1-P-558X	0.573"	3.580" (“F”,“H”,“L”,“R”,“S”,“U”) 3.481" (“Q”,“W”,“X”) 3.348" (“A”,“C”)	3.317" (“F”,“H”,“L”,“R”,“S”,“U”) 3.087" (“Q”,“W”,“X”) 3.050" (“A”,“C”)	6.207"	7.000"
489 Standard	1-P-552X	1.072"	4.079" (“F”,“H”,“L”,“R”,“S”,“U”) 3.980" (“Q”,“W”,“X”) 3.847" (“A”,“C”)	3.317" (“F”,“H”,“L”,“R”,“S”,“U”) 3.087" (“Q”,“W”,“X”) 3.050" (“A”,“C”)	6.708"	8.500"
489 Deep Mount	1-P-562X	0.930"	3.937" (“F”,“H”,“L”,“R”,“S”,“U”) 3.838" (“Q”,“W”,“X”) 3.705" (“A”,“C”)	3.317" (“F”,“H”,“L”,“R”,“S”,“U”) 3.087" (“Q”,“W”,“X”) 3.050" (“A”,“C”)	6.566"	8.500"

Assembly Arrangements

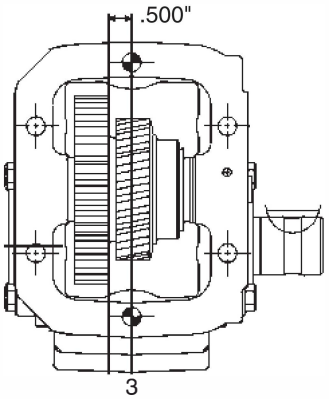

3

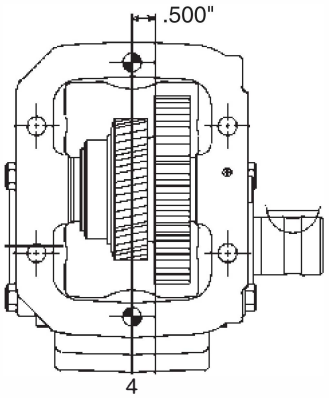

4

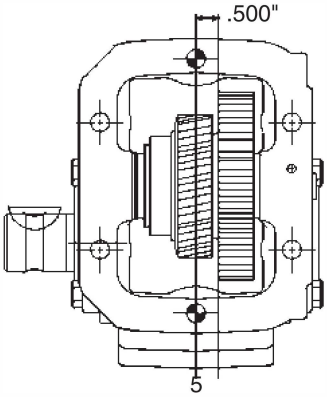

5

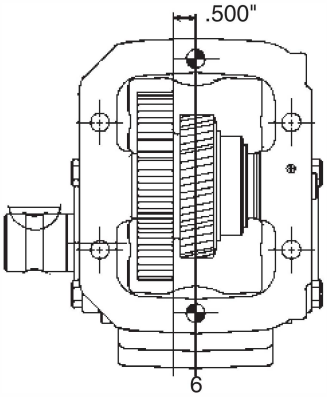

6

Pump Flange & Shaft Dimensions

442 & 489 Series

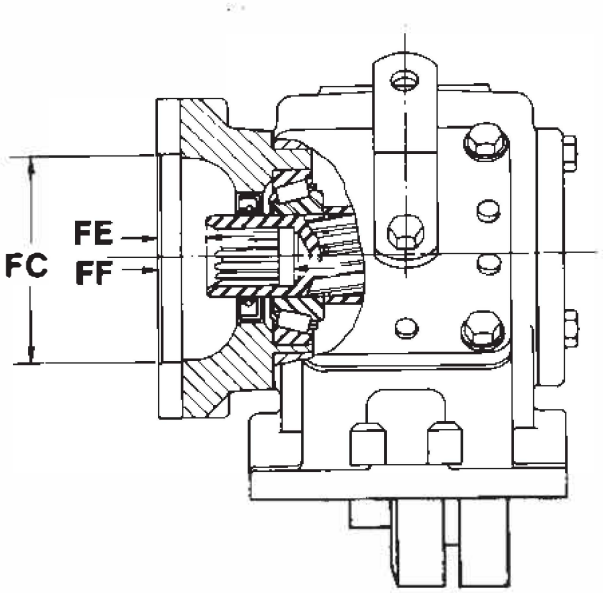

Pump Flange Suffix	Bolt Circle Dia.	Bolt Holes		FC	FD	FE	FF	FH	Output Shaft	
		Tapped Hole	No. Equally Spaced	Female Pilot Dia.	Pilot Depth	Face to End of Shaft	Face thru Hole	Face to Center of P.T.O.	Hole Diameter	Key-way Width
AA	2.834"	M10 - 1.5"	6	2.05"	N/A	N/A	N/A	3.447"	.982"/.816" - 6T Spline	—
AF, GF	5.750"	.500" - 13T	2	4.003"	0.406"	0.516"	1.984"	4.322"	1" - 15T Spline	—
	5.000"	.500" - 13T	4	4.003"	0.406"	0.516"	1.984"	4.322"	—	—
AK	5.750"	.500" - 13T	2	4.003"	0.406"	0.562"	2.062"	3.688"	7/8" - 13T Spline	—
AZ, GZ	5.000"	.500" - 13T	4	4.003"	0.406"	0.695"	2.392"	4.985"	1-1/4" - 14T Spline	—
FF	5.750"	.500" - 13T	2	4.003"	0.406"	0.516"	1.984"	4.322"	7/8" Rd	1/4"
	5.000"	.500" - 13T	4	4.003"	0.406"	0.516"	1.984"	4.322"	—	—
MY, GM	3.15" x 3.15"	M12-1.75"	12	3.152"	0.393"	0.594"	2.508"	4.697"	DIN 5462	—
PA●	5.750"	.536"	2	4.003"	0.406"	0.558"	2.058"	4.588"	7/8" - 13T Spline	—
PF●	5.750"	.536"	2	4.003"	0.406"	0.501"	1.969"	4.569"	1" - 15T Spline	—
RA●, GA	5.750"	.500" - 13T	2■	4.003"	0.406"	0.558"	2.058"	4.588"	7/8" - 13T Spline	—
RB●, GB	5.000"	.500" - 13T	4	4.003"	0.406"	0.558"	2.058"	4.588"	7/8" - 13T Spline	—
RC●	4.188"	.375" - 16T	2■	3.253"	0.270"	0.525"	1.462"	3.694"	5/8" - 9T Spline	—
RD●	4.188"	.375" - 16T	2■	3.253"	0.270"	0.525"	1.462"	3.694"	7/8" - 13T Spline	—
RE●, GJ	3.53" x 3.53"	.500" - 13T	4	4.003"	0.406"	0.501"	1.969"	4.569"	1" - 15T Spline	—
RF●, GH	5.750"	.500" - 13T	2■	4.003"	0.406"	0.501"	1.969"	4.569"	1" - 15T Spline	—
RH	4.188"	.375" - 16T	2■	3.253"	0.027"	0.525"	1.462"	3.694"	3/4" - 11T Spline	—
RY●	3.150"	M12 - 1.75"	4	3.152"	0.394"	0.360"	2.274"	4.79"	DIN 5462	—
XE	5.000"	.500" - 13T	4	3.253"	0.344"	0.562"	1.500"	3.688"	5/8" - 9T Spline	—
XG	4.188"	.375" - 16T	4	3.253"	0.562"	0.593"	2.218"	4.562"	3/4" Rd	3/16"
XJ	4.188"	.375" - 16T	4	3.253"	0.562"	1.406"	2.906"	4.562"	3/4" Rd	3/16"
XK, GK	5.750"	.531" - 13T	2	4.003"	0.406"	0.562"	2.062"	3.688"	7/8" - 13T Spline	—
	5.000"	.531" - 13T	4	4.003"	0.406"	0.562"	2.062"	3.688"	—	—
XL	4.188"	.375" - 16T	4	3.253"	0.562"	0.562"	2.062"	4.562"	7/8" - 13T Spline	—
XO	5.000"	.500" - 13T	4	3.253"	0.344"	0.562"	2.062"	3.688"	3/4" Rd	3/16"
	4.188"	.375" - 16T	2	3.253"	0.344"	0.562"	2.062"	3.688"	—	—
XP, GP	5.000"	.500" - 13T	4	3.253"	0.344"	0.562"	2.062"	3.688"	7/8" - 13T Spline	—
	4.188"	.375" - 16T	2	3.253"	0.344"	0.562"	2.062"	3.688"	—	—
XY, GY	4.454"	M12 - 1.75"	4	3.152"	0.393"	0.594"	2.508"	4.697"	DIN 5462	—
XQ, GQ,	5.750"	.500" - 13T	2	4.003"	0.406"	0.562"	2.062"	3.688"	7/8" - 13T Spline	—
SQ	5.000"	.500" - 13T	4	4.003"	0.406"	0.562"	2.062"	3.688"	—	—
XR, GR	3.710"	.312" - 24T (Studs)	4	2.752"	0.281"	N/A	N/A	2.809"	7/8" - 13T Spline	—

- ● Rotatable Flange Rotates in 30° Increments
- ■ Two Set of Holes Spaced 14° Apart
- ▸ Not Tapped

NOTE: To convert an "XR" to an "XK", use conversion flange number 21-P-525

Model Number Designation

442 & 489 Series

442 X Q AB X – Y 3 XD

442

Mounting Option
- **G** = Standard Mount w/Metric Studs
- **K** = Standard Mount Less Stud Kit
- **L** = Deep Mount Less Stud Kit
- **X** = Standard Mount
- **Z** = Deep Mount

Gear Ratio
- **A** = 14/39
- **B** = 14/39
- **C** = 17/37
- **F** = 21/37
- **H** = 23/35
- **L** = 25/34
- **Q** = 19/24
- **R** = 22/24
- **S** = 24/22
- **U** = 26/20
- **W** = 26/17
- **X** = 38/21

Input Gear

Lube Option
- **X** = No Pressure Lube
- **P** = Pressure Lube

Output Option
- **AK** = S.A.E. “B” 2-Bolt 7/8" - 13T
- **AF** = S.A.E. “BB” 2 or 4-Bolt 1" - 15T
- **AZ** = S.A.E. “B” 4-Bolt 1-1/4" - 14T
- **GA** = Greaseable Rotatable “B” 2-Bolt 7/8" - 13T
- **GB** = Greaseable Rotatable “B” 4-Bolt 7/8" - 13T
- **GF** = Greaseable S.A.E. “BB” 2 or 4-Bolt 1" - 15T
- **GH** = Greaseable Rot. S.A.E. “BB” 2-Bolt 1" - 15T
- **GK** = Greaseable S.A.E. “B” 2 or 4-Bolt 7/8" - 13T
- **GP** = Greaseable S.A.E. “B” 2 or 4-Bolt 7/8" - 13T
- **GQ** = Greaseable S.A.E. “B” 2 or 4-Bolt 7/8" - 13T
- **GR** = Greaseable CHELSEA SPECIAL 7/8" - 13T
- **GY** = Greaseable DIN 5462 8T
- **GZ** = Greaseable S.A.E. “B” 4-Bolt 1-1/4" - 14T
- **LA** = S.A.E. “B” 2-Bolt w/Self Lube Pump 7/8" - 13T
- **LB** = S.A.E. “A” 2-Bolt w/Self Lube Pump 7/8" - 13T
- **LC** = S.A.E. “B” 2 or 4-Bolt w/Self Lube 7/8" - 13T
- **LD** = 1-1/4" Rd w/Self Lube Pump
- **LF** = S.A.E. “B” 2 or 4-Bolt w/Self Lube 7/8" - 13T
- **PA** = Rotatable S.A.E. “B” 2-Bolt for P2-060 Pump
- **RA** = Rotatable S.A.E. “B” 2-Bolt 7/8" - 13T
- **RB** = Rotatable S.A.E. “B” 4-Bolt 7/8" - 13T
- **RC** = Rotatable S.A.E. “A” 2-Bolt 5/8" - 9T
- **RD** = Rotatable S.A.E. “A” 2-Bolt 7/8" - 13T
- **RE** = Rotatable S.A.E. “BB” 4-Bolt 1" - 15T
- **RF** = Rotatable S.A.E. “BB” 2-Bolt 1" - 15T
- **RH** = Rotatable S.A.E. “A” 2-Bolt 3/4" - 11T
- **RY** = Rotatable DIN 5462 8T
- **SQ** = S.A.E. “B” 4-Bolt 7/8" - 13T
- **XD** = 1-1/4" Rd Standard Shaft
- **XE** = S.A.E. “A” 2 or 4-Bolt 5/8" - 9T
- **XG** = S.A.E. “A” 2-Bolt 3/4" Rd
- **XJ** = S.A.E. “A” 2-Bolt 3/4" Rd
- **XK** = S.A.E. “B” 2 or 4-Bolt 7/8" - 13T
- **XQ** = S.A.E. “B” 2 or 4-Bolt 7/8" - 13T
- **XR** = CHELSEA SPECIAL 7/8" - 13T
- **XX** = Tapered Output Shaft
- **XY** = DIN 5462 8T

Assembly Arrangement
3, 4, 5, 6

Shift Option
- **A** = Air Shift
- **C** = Heavy Duty Bracket Less Cable
- **H** = No Wire Shift Cover
- **M** = Constant Mesh
- **P** = 12 Volt Electric/Air
- **S** = Combo Valve
- **T** = P.T.O. & Dump Pump Combo Valve Less Kick-out
- **V** = Air Shift Less Installation Kit
- **W** = Cable Shift
- **X** = Wire Less Cable & Knob

Model Number Designation

442 & 489 Series

489 X F AH X – P 3 XD

Mounting Option
- **K** = Standard Mount Less Stud Kit
- **G** = Standard Mount w/Metric Stud Kit
- **X** = Standard Mount
- **Z** = Deep Mount

Gear Ratio
- **A** = 14/39
- **C** = 17/37
- **F** = 21/37
- **H** = 23/35
- **L** = 25/34
- **Q** = 19/24
- **R** = 22/24
- **S** = 24/22
- **U** = 26/20
- **W** = 26/17
- **X** = 38/21

Input Gear

Lube Option
- **X** = No Lubrication
- **P** = Pressure Lube

Output Option
- **AK** = S.A.E. “B” 2-Bolt 7/8" - 13T
- **AF** = S.A.E. “BB” 2 or 4-Bolt 1" - 15T
- **AZ** = S.A.E. “B” 4-Bolt 1-1/4" - 14T
- **GA** = Greaseable Rotatable “B” 2-Bolt 7/8" - 13T
- **GB** = Greaseable Rotatable “B” 4-Bolt 7/8" - 13T
- **GF** = Greaseable S.A.E. “BB” 2 or 4-Bolt 1" - 15T
- **GH** = Greaseable Rot. S.A.E. “BB” 2-Bolt 1" - 15T
- **GK** = Greaseable S.A.E. “B” 2 or 4-Bolt 7/8" - 13T
- **GP** = Greaseable S.A.E. “B” 2 or 4-Bolt 7/8" - 13T
- **GQ** = Greaseable S.A.E. “B” 2 or 4-Bolt 7/8" - 13T
- **GR** = Greaseable CHELSEA SPECIAL 7/8" - 13T
- **GY** = Greaseable DIN 5462 8T
- **GZ** = Greaseable S.A.E. “B” 4-Bolt 1-1/4" - 14T
- **LA** = S.A.E. “B” 2-Bolt w/Self Lube Pump 7/8" - 13T
- **LB** = S.A.E. “A” 2-Bolt w/Self Lube Pump 7/8" - 13T
- **LC** = S.A.E. “B” 2 or 4-Bolt w/Self Lube 7/8" - 13T
- **LD** = 1-1/4" Rd w/Self Lube Pump
- **LF** = S.A.E. “B” 2 or 4-Bolt w/Self Lube 7/8" - 13T
- **PA** = Special S.A.E. “B” 2-Bolt 7/8" - 13 Spline
- **PF** = Special S.A.E. “B” 2-Bolt 1" - 15 Spline
- **RA** = Rotatable S.A.E. “B” 2-Bolt 7/8" - 13T
- **RB** = Rotatable S.A.E. “B” 4-Bolt 7/8" - 13T
- **RC** = Rotatable S.A.E. “A” 2-Bolt 5/8" - 9T
- **RD** = Rotatable S.A.E. “A” 2-Bolt 7/8" - 13T
- **RE** = Rotatable S.A.E. “BB” 4-Bolt 1" - 15T
- **RF** = Rotatable S.A.E. “BB” 2-Bolt 1" - 15T
- **RY** = Rotatable DIN 5462 8T
- **SQ** = S.A.E. “B” 4-Bolt 7/8" - 13T
- **XD** = 1-1/4" Rd Standard Shaft
- **XE** = S.A.E. “A” 2 or 4-Bolt 5/8" - 9T
- **XG** = S.A.E. “A” 2-Bolt 3/4" Rd
- **XJ** = S.A.E. “A” 2-Bolt 3/4" Rd
- **XK** = S.A.E. “B” 2 or 4-Bolt 7/8" - 13T
- **XQ** = S.A.E. “B” 2 or 4-Bolt 7/8" - 13T
- **XR** = CHELSEA SPECIAL 7/8" - 13T
- **XX** = Tapered Output Shaft
- **XY** = DIN 5462 8T

Assembly Arrangement
3, 4, 5, 6

Shift Option
- **A** = Air Shift
- **C** = Heavy Duty Bracket Less Cable
- **H** = No Wire Shift Cover
- **M** = Constant Mesh
- **P** = 12 Volt Electric/Air
- **S** = Combo Valve
- **T** = P.T.O. & Dump Pump Combo Valve Less Kick-out
- **V** = Air Shift Less Installation Kit
- **W** = Cable Shift
- **X** = Wire Less Cable & Knob

329091X	Lube Pump & Bearing Cap Assembly	
28-P-249	O-Ring	2
3-P-881	Gerotor Shaft	1
329093X	Pump Adapter	1
21-P-530	Pump Adapter	1
550221	Bearing Tab	1
378429-11	Hex Capscrew	3
379173	Plate-Plump	1
379175	Retaining	1
379176	Pump-Gerotor	1
379525	Pump Cap	1
500037-7	Dowel Pin	2
500566-3	Ball	1
500897-11	Cap Plug	1
500897-8	Shipping Plug	1
329092X	Pressure Lube Hose Assembly	
379280	Fitting Swivel	1
385004	Female JIC	1
385003	Male NPTF	1
385006	Hose Bulk	1
329096-1X	Field Conversion Kit (Self Lube Replace 3-P-202)	
28-P-216	Oil Seal	1
3-P-857	Output Shaft	1
329091X	Lube Pump	1
329092X	Pressure Lever	1
378391	Lock/Retaining	2
379534	Inst Instruction	1
500841-1	Elbow 90°	1
28-P-190	O-Ring .73	1
28-P-191	O-Ring .54	1
9-P-76	Idler Shaft	1
378422	Drive Screw	2
379646	Installation	1
22-P-127-1	Bearing Cone	4
22-P-127-2	Bearing Cone	4
22-P-127-3	Bearing Cone	4
68-P-2	Name Plate	1
329097-1X	Field Conversion Kit (Self Lube Replace 3-P-282)	
378391	Lock/Retaining	2
500841-1	Elbow 90°	1
379534	Inst Instruction	1
379646	Installation	1
378422	Drive Screw	2
329092X	Pressure Lever	1
329091X	Lube Pump	1
28-P-191	O-Ring .54	1
28-P-190	O-Ring .73	1
28-P-216	Oil Seal	1
9-P-76	Idler Shaft	1
3-P-858	Pump Shaft	1
22-P-127-1	Bearing Cone	4
22-P-127-2	Bearing Cone	4
22-P-127-3	Bearing Cone	4
68-P-2	Name Plate	1

329106-39X	Air Shift (Ass'y 3&6)	
329361X	Shifter Cover	1
378430-9	Hex Capscrew	4
35-P-8	Shifter Cover	1
328388-98X	Kit Installation	1
329106-43X	Electric/Air 12V	
328388-47X	12V Electric	1
329361X	Shifter Cover	1
378430-9	Hex Capscrew	4
35-P-8	Shifter Cover	1
329106-45X	Electric/Air 24V	
328388-48X	24V Electric Over Air	1
329361X	Shifter Cover	1
378430-9	Hex Capscrew	4
35-P-8	Shifter Cover	1
329106-105X	Cable Shift ("Q", "W", & "X")	
328380X	Mounting Parts Kit	1
329119-1X	Cable Control Cover	1
35-P-8	Shifter Cover	1
378430-9	Hex Capscrew	4
378441-10	10 Ft. Wire	1
378502	Knob	1
328751-1X	Install Kit	1
329106-106X	Cable Shift ("Q", "W", & "X")	
328751-1X	Install Kit	1
328380X	Mounting Parts Kit	1
329119-2X	Cable Control Cover	1
35-P-8	Shifter Cover	1
378430-9	Hex Capscrew	4
378441-10	Wire	1
378502	Knob	1
329106-107X	Wire Shift Kit Less	
328751-1X	Install Kit	1
329119-1X	Cable Control Cover	1
35-P-8	Shifter Cover	1
378430-9	Hex Capscrew	4
329106-108X	Wire Shift Kit Less	
328751-1X	Install Kit	1
329119-2X	Cable Control Cover	1
35-P-8	Shifter Cover	1
378430-9	Hex Capscrew	4
329106-109X		
328751-1X	Install Kit	1
328380X	Mounting Parts Kit	1
329121-1X	Cable Control Cover	1
35-P-8	Shifter Cover	1
378430-9	Hex Capscrew	4
378441-10	10 Ft. Wire	1
378502	Knob	1

Continued on Next Page

329106-110X

328380X	Mounting Parts Kit	1
329121-2X	Cable Control Cover	1
35-P-8	Shifter Cover	1
378430-9	Hex Capscrew	4
378441-10	10 Ft. Wire	1
378502	Knob	1
328751-1X	Install Kit	1

329106-111X Cable Shift, Less Cable

328751-1X	Install Kit	1
329121-1X	Cable Control Cover	1
35-P-8	Shifter Cover	1
378430-9	Hex Capscrew	4

329106-112X Cable Shift, Less Cable

328751-1X	Install Kit	1
329121-2X	Cable Control Cover	1
35-P-8	Shifter Cover	1
378430-9	Hex Capscrew	4

329106-135X Constant Mesh Kit

34-P-39	Cover Plate	1
35-P-8	Shifter Cover	1
378430-6	Hex Capscrew	4
4-P-178	Spacer Drive Shaft	1
4-P-177	Spacer Drive Shaft	1

329106-143X Shifter Kit

378430-10	Hex Capscrew	4
378441-10	10 Ft. Wire	1
5-A-188	Use 5-A-18	1
329271-1X	Cover Ass'y	1
328380X	Mounting Parts Kit	1
378502	Knob	1
328751-1X	Install Kit	1
35-P-8	Shifter Cover	2

329106-144X Shifter Kit

35-P-8	Shifter Cover	2
328751-1X	Install Kit	1
329271-2X	Cover Ass'y	1
378430-10	Hex Capscrew	4
5-A-188	Use 5-A-18	1
378441-10	10 Ft. Wire	1
378502	Knob	1
328380X	Mounting Parts Kit	1

329106-145X Shifter Kit

378430-10	Hex Capscrew	1
5-A-188	Use 5-A-18	1
329271-1X	Cover Ass'y	1
328751-1X	Install Kit	1
35-P-8	Shifter Cover	2

329106-146X Shifter Kit

35-P-8	Shifter Cover	2
329271-2X	Cover Ass'y	1
5-A-188	Use 5-A-18	1
378430-10	Hex Capscrew	4
328751-1X	Install Kit	1

329106-153X Shifter Kit "V" Option

379640	Booted Connector	1
378414	Pressure Protection Valve	1
35-P-8	Shifter Cover	1
329361X	Shifter Cover	1
378430-9	Hex Capscrew	4
Owners Manual	HY25-1135-M1/US	1

Ratios "Q" & "W" & "X"

329118-1X Post and Plate Assembly, (Ass'y 3 & 6)

62-P-45	Shifter Plate	1
63-P-20	Shifter Pin	1
64-P-1	Shifter Shoe	1
378244	Shifter Post	1
378246	Lockring	1
378313	Lifter Plate	1

329118-2X Post and Plate Assembly, (Ass'y 4 & 5)

62-P-46	Shifter Plate	1
63-P-20	Shifter Pin	1
64-P-1	Shifter Shoe	1
378244	Shifter Post	1
378246	Lockring	1
378313	Lifter Plate	1

Ratios "Q", "W" & "X"

329119-1X Shifter Cover Ass'y, Wire Control (Ass'y 3 & 6)

28-P-191	O-Ring	1
34-P-74	Shifter Cover	1
37-P-19	Spring	1
51-P-22	Shifter Lever	1
63-P-16	Poppet Pin	1
329118-1X	Shifter Plate Ass'y	1
378004	Flat Washer	1
379639	Indicator Switch	1
500356-10	Lock Washer	1
500365-22	Flat Washer	1
500409-6	Hex. HD. Capscrew .312" - 24 x .625"	1

329119-2X Shifter Cover Ass'y, Wire Control (Ass'y 4 & 5)

28-P-191	O-Ring	1
34-P-74	Shifter Cover	1
37-P-19	Spring	1
51-P-22	Shifter Lever	1
63-P-16	Poppet Pin	1
329118-2X	Shifter Plate Ass'y	1
378004	Flat Washer	1
379639	Indicator Switch	1
500356-10	Lock Washer	1
500365-22	Flat Washer	1
500409-6	Hex. HD. Capscrew .312" - 24 x .625"	1

329120-1X Post and Plate Assembly, (Ass'y 3 & 6)

62-P-45	Shifter Plate	1
63-P-21	Shifter Pin	1
64-P-1	Shifter Shoe	1
378244	Shifter Post	1
378246	Lockring	1
378313	Lifter Plate	1

Continued on Next Page

329120-2X	Post and Plate Assembly, (Ass'y 4 & 5)	
62-P-46	Shifter Plate	1
63-P-21	Shifter Pin	1
64-P-1	Shifter Shoe	1
378244	Shifter Post	1
378246	Lockring	1
378313	Lifter Plate	1

329121-1X	Shifter Cover Ass'y, Wire Control (Ass'y 3 & 6)	
28-P-191	O-Ring	1
34-P-74	Shifter Cover	1
37-P-19	Spring	1
51-P-22	Shifter Lever	1
63-P-16	Poppet Pin	1
329120-1X	Shifter Plate Ass'y	1
378004	Flat Washer	1
379639	Indicator Switch	1
500356-10	Lock Washer	1
500365-22	Flat Washer	1
500409-6	Hex. HD. Capscrew .312" - 24 x .625"	1

329121-2X	Shifter Cover Ass'y, Wire Control (Ass'y 4 & 5)	
28-P-191	O-Ring	1
34-P-74	Shifter Cover	1
37-P-19	Spring	1
51-P-22	Shifter Lever	1
63-P-16	Poppet Pin	1
329120-2X	Shifter Plate Ass'y	1
378004	Flat Washer	1
379639	Indicator Switch	1
500356-10	Lock Washer	1
500365-22	Flat Washer	1
500409-6	Hex. HD. Capscrew .312" - 24 x .625"	1

329143X	Dust Cover Kit	
35-P-14	Gasket	1
378430-4	Capscrew Hex Head	2
65-P-23	Cover Shift	1

Ratios "Q" & "W"

329151-1X	Shifter Cover Assembly Wire Control (Ass'y 3 & 6)	
28-P-191	O-Ring	1
34-P-74	Shifter Cover	1
37-P-19	Spring	1
51-P-22	Shifter Lever	1
63-P-16	Poppet Pin	1
329118-1X	Shifter Plate Ass'y	1
378004	Flat Washer	1
379652	Indicator Switch Norm. "On"	1
500356-10	Lock Washer	1
500365-22	Flat Washer	1
500409-6	Hex. HD. Capscrew .312" - 24 x .625"	1

329151-2X	Shifter Cover Assembly Wire Control (Ass'y 4 & 5)	
28-P-191	O-Ring	1
34-P-74	Shifter Cover	1
37-P-19	Spring	1
51-P-22	Shifter Lever	1
63-P-16	Poppet Pin	1
329118-2X	Shifter Plate Ass'y	1
378004	Flat Washer	1
379652	Indicator Switch Norm. "On"	1
500356-10	Lock Washer	1
500365-22	Flat Washer	1
500409-6	Hex. HD. Capscrew .312" - 24 x .625"	1

Ratios "R", "S" & "U"

329152-1X	Shifter Cover Assembly Wire Control (Ass'y 3 & 6)	
28-P-191	O-Ring	1
34-P-74	Shifter Cover	1
37-P-19	Spring	1
51-P-22	Shifter Lever	1
63-P-16	Poppet Pin	1
329120-1X	Shifter Plate Ass'y	1
378004	Flat Washer	1
379652	Indicator Switch Norm. "On"	1
500356-10	Lock Washer	1
500365-22	Flat Washer	1
500409-6	Hex. HD. Capscrew .312" - 24 x .625"	1

329152-2X	Shifter Cover Assembly Wire Control (Ass'y 4 & 5)	
28-P-191	O-Ring	1
34-P-74	Shifter Cover	1
37-P-19	Spring	1
51-P-22	Shifter Lever	1
63-P-16	Poppet Pin	1
329120-2X	Shifter Plate Ass'y	1
378004	Flat Washer	1
379652	Indicator Switch Norm. "On"	1
500356-10	Lock Washer	1
500365-22	Flat Washer	1
500409-6	Hex. HD. Capscrew .312" - 24 x .625"	1

329166-12X	Electric Shift Installation Kit	
329158-12X	Electric Shift	1
329163-10X	Electric Shift	1
379247	Fuse Holder	1
379252	Butt Connector	2
379253	Ring Connector	1
379257	Splice Connector	1
379265	Grommet	1
379689	Self Taping Screw	4
500357-7	Lockwasher	4
500376-6	Nut 10-24	4
500457-6	Slotted Screw	4
379640	Booted Connector	1
379061X	Tie Wire	1
Owners Manual	HY25-1667-M1/US	1

Continued on Next Page

329202X	Indicator Switch Connector Service Kit	
379252	Butt Connector	1
379639	Switch Indicator	1
379640	Booted Connector	1
329260X	Conversion Kit, 440 to 442 Series	
1-P-557X	Housing, Standard Mount	1
1-P-557	P.T.O. Housing	1
500597-16	Roll Pin, Standard Mount (1.125" Long)	1
328594-13X	Bearing Spacer Kit	1
329261X	Conversion Kit 440 Deep Mount to 442 Deep Mount	
1-P-558X	Deep Mount w/Roll Pin	1
1-P-558	Housing Deep Mount	1
500597-14	Roll Pin, Deep Mount (1" Long)	1
328594-13X	Bearing Spacer Kit	1
329262X	Conversion Kit, 488 to 489 Series	
1-P-552X	Housing Standard w/Roll Pin	1
1-P-552	Housing	1
500597-16	Pin Roll	1
328594-13X	Bearing Spacer Kit (Non Pressure Lube)	1
329263X	Conversion Kit 488 Deep Mount to 489 Deep Mount	
1-P-562X	Deep Mount	1
1-P-562	Housing	1
500597-16	Pin Roller	1
328594-13X	Bearing Spacer Kit	1
31-P-102	Thrust Washer	1
379672	Plug O-Ring	1
9-P-88	Idler Shaft	1
550439	Bearing Cone	1
28-P-191	O-Ring	
14-P-73-1	Spacer Idler Gear (.149"-.151")	1
14-P-73-2	Spacer Idler Gear (.152"-.154")	1
14-P-73-3	Spacer Idler Gear (.155"-.157")	1

Ratios “A”, “B” & “C”

329265-1X	Post and Plate Assembly, (Ass’y 3 & 6)	
62-P-45	Shifter Plate	1
63-P-23	Shifter Pin	1
64-P-1	Shifter Shoe	1
378244	Shifter Post	1
378246	Lockring	1
378313	Lifter Plate	1
329265-2X	Post and Plate Assembly, (Ass’y 4 & 5)	
62-P-46	Shifter Plate	1
63-P-23	Shifter Pin	1
64-P-1	Shifter Shoe	1
378244	Shifter Post	1
378246	Lockring	1
378313	Lifter Plate	1

Ratios “A”, “B” & “C”

329271-1X	Shifter Cover Assembly Wire Control (Ass’y 3 & 6)	
28-P-191	O-Ring	1
34-P-74	Shifter Cover	1
37-P-19	Spring	1
51-P-22	Shifter Lever	1
63-P-16	Poppet Pin	1
329265-1X	Shifter Plate Ass’y	1
378004	Flat Washer	1
379639	Indicator Switch Norm. “On”	1
500356-10	Lock Washer	1
500365-22	Flat Washer	1
500409-6	Hex. HD. Capscrew .312" - 24 x .625"	1
329271-2X	Shifter Cover Assembly Wire Control (Ass’y 4 & 5)	
28-P-191	O-Ring	1
34-P-74	Shifter Cover	1
37-P-19	Spring	1
51-P-22	Shifter Lever	1
63-P-16	Poppet Pin	1
329265-2X	Shifter Plate Ass’y	1
378004	Flat Washer	1
379639	Indicator Switch Norm. “On”	1
500356-10	Lock Washer	1
500365-22	Flat Washer	1
500409-6	Hex. HD. Capscrew .312" - 24 x .625"	1
329304X	Bearing Cap & Seal	
21-P-641	Bearing Cap	1
28-P-224	Oil Seal	1
329361X	Shifter Cover Assembly, Air Shift	
34-P-130	Shifter Cover	1
379639	Indicator Switch (Normally OFF)	1
21-P-572	Flange Pump	1
28-P-216	Oil Seal	1
3-P-980	Output Shaft	1
329195X	Bearing Cap Ass’y	1
378391	Lock/Retaining	2
378447-6	Socket Head	7
379638	P.T.O. Tag	1
379688	Lubricant Spline	1
22-P-127-1	Bearing Cone	2
22-P-127-2	Bearing Cone	2
22-P-127-3	Bearing Cone	1
329436-1X	Pump Conv Kit “RA” “B” Ratio Only	
21-P-628	Pump Flange	1
28-P-216	Oil Seal	1
3-P-980	Output Shaft	1
329195X	Bearing Cap Ass’y	1
378391	Lock/Retaining	2
378447-6	Socket Head	7
379638	P.T.O. Tag	1
379688	Lubricant Spline	1
22-P-127-1	Bearing Cone	2
22-P-127-2	Bearing Cone	2
22-P-127-3	Bearing Cone	1

Continued on Next Page

Kits Bill of Materials

329436-3X	Pump Conv Kit "XK" "B" Ratio Only	
3-P-979	Output Shaft	1
328333X	Flange Assembly	1
378391	Lock/Retaining	2
378447-8	Socket Head	4
379688	Lubricant Spline	1
22-P-127-1	Bearing Cone	2
22-P-127-2	Bearing Cone	2
22-P-127-3	Bearing Cone	1
329436-6X	Pump Conv Kit "XQ" "B" Ratio Only	
28-P-216	Oil Seal	1
3-P-979	Output Shaft	1
328589X	Bearing Cap	1
378391	Lock/Retaining	2
378447-8	Socket Head	4
379688	Lubricant Spline	1
22-P-127-1	Bearing	2
22-P-127-2	Bearing Cone	2
22-P-127-3	Bearing Cone	1
329436-7X	Pump Conv Kit "AK" "B" Ratio Only	
28-P-216	Oil Seal	1
328989X	Flange Assembly	1
378391	Lock/Retaining	2
378447-8	Socket Head	4
379688	Lubricant Spline	1
3-P-979	Output Shaft	1
22-P-127-1	Bearing Cone	2
22-P-127-2	Bearing Cone	2
22-P-127-3	Bearing Cone	1
329436-8X	Pump Conv Kit "RD" "B" Ratio Only	
21-P-638	Pump Flange	1
329322X	Bearing Cap	1
378391	Lock/Retaining	2
378447-6	Socket Head	4
379638	P.T.O. Tag	1
379688	Lubricant Spline	1
378446-4	Screw, Socket	6
28-P-216	Oil Seal	1
3-P-979	Output Shaft	1
22-P-127-1	Bearing Cone	2
22-P-127-2	Bearing Cone	2
22-P-127-3	Bearing Cone	1
329436-9X	Pump Conv Kit "SQ" "B" Ratio Only	
28-P-216	Oil Seal	1
3-P-979	Output Shaft	1
329449X	Bearing Cap	1
378391	Lock/Retaining	2
378447-8	Socket Head	4
379688	Lubricant Spline	1
22-P-127-1	Bearing Cone	2
22-P-127-2	Bearing Cone	2
22-P-127-3	Bearing Cone	1
328170-76X	Stud Kit, Standard (422 Series)	
379423-15	Stud .375"	6
379744	Flange Nut	6
328170-77X	Stud Kit, Deep Mount (422 Series)	
379744	Flange Nut	3
378431-11	Hex Capscrew	3
379423-12	Stud .375"	3
378774	Tablock Washer	3
328170-200X	Stud Kit , Standard & Deep Mount (489 Series)	
379224	Tab Lockwasher	6
378432-12	Capscrew	6
379424-18	Stud	2
379745	Flange Nut	2
328170-201X	Stud Kit, Metric (489 Series)	
379745	Flange Nut	8
379429-19	Stud Metric	8
328346-10X	Cable Control	
378441-10	10 Ft. Wire	1
378502	Knob	1
328356-13X	Gasket & Seal Kit	
22-P-127-1	Gasket, Bearing Cap	4
22-P-127-2	Gasket, Bearing Cap	4
22-P-127-3	Gasket, Bearing Cap	2
28-P-190	O-Ring	1
28-P-191	O-Ring	2
28-P-216	Oil Seal	1
35-P-8	Gasket, Shifter Cover	2
35-P-9-1	Gasket, Housing (.010")	2
35-P-9-2	Gasket, Housing (.020")	2
378391	Lockring	2
378774	Lockwasher	6
328356-15X	Shifter Cover Seal Kit (Wire Control)	
22-P-69	Gasket	1
28-P-191	O-Ring	1
28-P-226	Oil Seal	1
35-P-8	Gasket, Shifter Cover	1
35-P-9-1	Gasket, Housing	2
35-P-9-2	Gasket, Housing	2
328356-50X	Gasket & Seal Kit	
22-P-127-1	Gasket, Bearing Cap	4
22-P-127-2	Gasket, Bearing Cap	4
22-P-127-3	Gasket, Bearing Cap	4
28-P-190	O-Ring	1
28-P-191	O-Ring	1
28-P-216	Oil Seal	1
35-P-8	Gasket, Shifter Cover	1
35-P-15-1	Gasket, Housing	1
35-P-15-2	Gasket, Housing	1
378391	Lockring	2

Continued on Next Page

328356-67X	Gasket & Seal Kit	
22-P-127-1	Gasket, Bearing Cap	4
22-P-127-2	Gasket, Bearing Cap	4
22-P-127-3	Gasket, Bearing Cap	4
28-P-191	O-Ring	2
28-P-216	Oil Seal	1
35-P-8	Gasket, Shifter Cover	1
35-P-9-1	Gasket, Housing	2
35-P-9-2	Gasket, Housing	2
328356-69X	Shifter Cover Seal Kit (Wire Control “A”, “B” & “C” Ratio)	
22-P-69	Gasket	1
28-P-191	O-Ring	1
28-P-226	Oil Seal	1
5-A-188	Spacer	1
35-P-9-1	Gasket, Housing	2
35-P-9-2	Gasket, Housing	2
328356-71X	Shifter Cover Seal Kit (Air Shift)	
28-P-41	O-Ring	1
28-P-42	O-Ring	2
378316	Retainer	2
35-P-8	Gasket, Shifter Cover	2
35-P-9-1	Gasket, Housing	1
35-P-9-2	Gasket, Housing	1
328380X	Mounting Parts Kit	
378326	Nut, Hex	1
50-P-17	Bracket, Wire Control	1
50-P-19	Swivel Bracket	1
500396-8	Screw, Hex	1
500568-4	Set Screw	1
378019	Pivot Pin	1
328388-37X	Air Shift Installation Kit (“A” Shifter)	
328388-44X	Air Shift	1
329090-1X	Valve Kit	1
379044-7	Nylon Tubing	1
379130	Support Bracket	2
68-P-27	Control Plate	1
379640	Booted Connector	1
328388-44X	Air Shift Kit	
378416	Hex Nipple	1
378978	Indicator	1
379042	Male Connector	2
379043	Male Elbow	1
379252	Butt Connector	2
500357-7	Lockwasher	8
500376-6	Nut 10-24	4
500448-9	Screw Slot	4
379900	Ass’y Fuse	1
379904	Push Connect	1
328388-46X	Inst Kit Parts Bag	
379900	Ass’y Fuse	1
378416	Hex Nipple	1
379042	Male Connector	2
379043	Male Elbow	1
379253	Ring Connector	1
379257	Splice Connect	1
379306	Fork Connector	4
500357-7	Lockwasher	2
500457-6	Slotted Screw	2
379904	Push Connect	1
328388-47X	12V Electric Over Air	
328388-46X	Inst Kit P Shift Option	1
378414	Pressure Protection Valve	1
378881	Rocker Swivel	1
378978	Indicator	1
379044-7	Nylon Tubing	1
379252	Butt Connector	2
379258	Bracket	1
379303-1	Valve 12V	1
379336	Switch Bracket	1
379254-3	Wire, Green	1
379106	Breather Cap	1
379640	Booted Connector	1
328388-48X	24V Electric Over Air	
379640	Booted Connector	1
328388-46X	Inst Kit P Shift Option	1
378414	Pressure Protection Valve	1
378881	Rocker Swivel	1
379005	Indicator	1
379044-7	Nylon Tubing	1
379252	Butt Connector	1
379258	Bracket	1
379303-2	Valve 24V	1
379336	Switch Bracket	1
379106	Breather Cap	1
379254-3	Wire, Green	1
328388-65X	Air-O-Matic Shift	
329214X	Apsco Valve	1
378414	Pressure Protection Valve	1
328388-64X	Airshift Kit	1
328388-72X	Air Shift	
378414	Pressure Protection Valve	1
329316X	Valve Assembly	1
328388-64X	Airshift Kit	1
328388-97X	Airshift	
328931X	Kit Valve	1
500357-7	Lockwasher	4
500376-6	Nut 10-24	4
500448-9	Screw Slot	4
378416	Hex Nipple	1
379042	Male Connector	1
379252	Butt Connector	2
379900	Ass’y Fuse	1
379904	Push Connect	1
75-P-13	Light Indicator	1

Continued on Next Page

328388-98X	Kit Installation Air Shift	
328388-97X	Air Shift	1
329090-6X	Kit Valve	1
379044-7	Nylon Tubing	1
379130	Support Bracket	2
379640	Booted Connector	1
328390-117X	Cable to Air	
35-P-8	Shifter Cover	1
329361X	Shifter Cover	1
378430-9	Hex Capscrew	4
328388-98X	Kit Installation	1
Owners Manual	HY25-1135-M1/US	1
328390-119X	Cable to Electric/Air	
328388-47X	12V Electric	1
329361X	Shifter Cover	1
35-P-8	Shifter Cover	1
378430-11	Hex Capscrew	4
Owners Manual	HY25-1135-M1/US	1
328390-120X	Cable to Electric/Air	
328388-48X	24V Electric Over Air	1
329361X	Shifter Cover	1
35-P-8	Shifter Cover	1
378430-11	Hex Capscrew	4
Owners Manual	HY25-1135-M1/US	1
328591-10X	"XG" Pump Conversion	
28-P-216	Oil Seal	1
3-P-281	Pump Shaft	1
328580X	Flange Assembly	1
378391	Lock/Retaining	2
378447-8	Socket Head	4
22-P-127-1	Bearing Cone	2
22-P-127-2	Bearing Cone	2
22-P-127-3	Bearing Cone	1
328591-11X	"XJ" Pump Conversion	
28-P-216	Oil Seal	1
3-P-284	Pump Shaft	1
328580X	Flange Assembly	1
378391	Lock/Retaining	2
378447-8	Socket Head	4
22-P-127-1	Bearing Cone	2
22-P-127-2	Bearing Cone	2
22-P-127-3	Bearing Cone	1
328591-16X	"XK" Pump Conversion	
3-P-282	Pump Shaft	1
328333X	Flange Assembly	1
378391	Lock/Retaining	2
378447-8	Socket Head	4
379688	Lubricant Spline	1
22-P-127-1	Bearing Cone	2
22-P-127-2	Bearing Cone	2
22-P-127-3	Bearing Cone	1
328591-17X	"XQ" Pump Conversion	
28-P-216	Oil Seal	1
3-P-282	Pump Shaft	1
328589X	Bearing Cap	1
378391	Lock/Retaining	2
378447-8	Socket Head	4
379688	Lubricant Spline	1
22-P-127-1	Bearing Cone	2
22-P-127-2	Bearing Cone	2
22-P-127-3	Bearing Cone	1
328591-18X	"XL" Pump Conversion	
28-P-216	Oil Seal	1
3-P-283	Pump Shaft	1
328580X	Flange Assembly	1
378391	Lock/Retaining	2
378447-8	Socket Head	4
379688	Lubricant Spline	1
22-P-127-1	Bearing Cone	2
22-P-127-2	Bearing Cone	2
22-P-127-3	Bearing Cone	1
328591-23X	"XP" Pump Conversion	
28-P-216	Oil Seal	1
3-P-282	Pump Shaft	1
328328X	Flange Assembly	1
378391	Lock/Retaining	2
378447-8	Socket Head	4
379688	Lubricant Spline	1
22-P-127-1	Bearing Cone	2
22-P-127-2	Bearing Cone	2
22-P-127-3	Bearing Cone	1
328591-26X	"XO" Pump Conversion	
28-P-216	Oil Seal	1
3-P-284	Pump Shaft	1
328328X	Flange Assembly	1
378391	Lock/Retaining	2
378447-8	Socket Head	4
22-P-127-1	Bearing Cone	2
22-P-127-2	Bearing Cone	2
22-P-127-3	Bearing Cone	1
328591-27X	"XE" Pump Conversion	
28-P-216	Oil Seal	1
3-P-800	Pump Shaft	1
328328X	Flange Assembly	1
378391	Lock/Retaining	2
378447-8	Socket Head	4
379688	Lubricant Spline	1
22-P-127-1	Bearing Cone	2
22-P-127-2	Bearing Cone	2
22-P-127-3	Bearing Cone	1

Continued on Next Page

328591-28X	"AK" Pump Conversion	
28-P-216	Oil Seal	1
3-P-282	Pump Shaft	1
328989X	Flange Assembly	1
378391	Lock/Retaining	2
378447-8	Socket Head	4
379688	Lubricant Spline	1
22-P-127-1	Bearing Cone	2
22-P-127-2	Bearing Cone	2
22-P-127-3	Bearing Cone	1

328591-29X	"FF" Pump Conversion	
28-P-219	Oil Seal	1
3-P-851	Pump Shaft	1
329088X	Flange Assembly	1
378391	Lock/Retaining	2
378447-10	Capscrew	4
379688	Lubricant Spline	1
22-P-127-1	Bearing Cone	2
22-P-127-2	Bearing Cone	2
22-P-127-3	Bearing Cone	1

328591-30X	"AF" Pump Conversion	
28-P-219	Oil Seal	1
3-P-854	Pump Shaft	1
329088X	Flange Assembly	1
378391	Lock/Retaining	2
378447-10	Capscrew	4
379688	Lubricant Spline	1
22-P-127-1	Bearing Cone	2
22-P-127-2	Bearing Cone	2
22-P-127-3	Bearing Cone	1

328591-44X	"LA" Pump Conversion	
28-P-216	Oil Seal	1
3-P-858	Pump Shaft	1
328989X	Flange Assembly	1
329091X	Lube Pump	1
329092X	Pressure Lube	1
378391	Lock/Retaining	2
378447-8	Socket Head	4
379533	Installation	1
379534	Inst Instruction	1
500841-1	Elbow 90°	1
500897-5	Plug Shipping	1
9-P-76	Idler Shaft	1
22-P-127-1	Bearing Cone	2
22-P-127-2	Bearing Cone	2
22-P-127-3	Bearing Cone	2

328591-45X	"LB" Pump Conversion	
28-P-216	Oil Seal	1
3-P-858	Pump Shaft	1
328328X	Flange Assembly	1
329091X	Lube Pump	1
329092X	Pressure Lube	1
378391	Lock/Retaining	2
378447-8	Socket Head	4
379533	Installation	1
379534	Inst Instruction	1
500841-1	Elbow 90°	1
500897-5	Plug Shipping	1
9-P-76	Idler Shaft	1
22-P-127-1	Bearing Cone	2
22-P-127-2	Bearing Cone	2
22-P-127-3	Bearing Cone	2

328591-46X	"LC" Pump Conversion	
28-P-216	Oil Seal	1
3-P-858	Pump Shaft	1
328589X	Bearing Cap	1
329091X	Lube Pump	1
329092X	Pressure Lube	1
378391	Lock/Retaining	1
378447-8	Socket Head	4
379533	Installation	1
379534	Inst Instruction	1
500841-1	Elbow 90°	1
500897-5	Plug Shipping	1
9-P-76	Idler Shaft	1
22-P-127-1	Bearing Cone	2
22-P-127-2	Bearing Cone	2
22-P-127-3	Bearing Cone	2

328591-47X	"LE" Pump Conversion	
28-P-216	Oil Seal	1
3-P-858	Pump Shaft	1
328584X	Flange Assembly	1
329091X	Lube Pump	1
329092X	Pressure Lube	1
378391	Lock/Retaining	2
378447-8	Socket Head	4
379533	Installation	1
379534	Inst Instruction	1
500841-1	Elbow 90°	1
500897-5	Plug-Shipping	1
9-P-76	Idler Shaft	1
22-P-127-1	Bearing Cone	2
22-P-127-2	Bearing Cone	2
22-P-127-3	Bearing Cone	2

Continued on Next Page

328591-48X	"LF" Pump Conversion	
3-P-858	Pump Shaft	1
328333X	Flange Assembly	1
329091X	Lube Pump	1
329092X	Pressure Lube	1
378391	Lock/Retaining	2
378447-8	Socket Head	4
379533	Installation	1
379534	Inst Instruction	1
500841-1	Elbow 90°	1
500897-5	Plug Shipping	1
9-P-76	Idler Shaft	1
22-P-127-1	Bearing Cone	2
22-P-127-2	Bearing Cone	2
22-P-127-3	Bearing Cone	2

328591-52X	Pump Conv. Kit "XD"	
28-P-216	Oil Seal	1
3-P-283	Pump Shaft	1
328711X	Pump Mount	1
329194X	Bearing Cap Ass'y	1
378391	Lock/Retaining	2
379063	Flat Washer	4
379673	Stud	4
379688	Lubricant Spline	1
22-P-127-1	Bearing Cone	2
22-P-127-2	Bearing Cone	2
22-P-127-3	Bearing Cone	1

328591-53X	Pump Conv. Kit "R"	
378447-6	Socket Head	7
379638	P.T.O. Tag	1
21-P-628	Pump Flange	1

328591-54X	Pump Conv. Kit "R"	
21-P-572	Flange Pump	1
378447-6	Socket Head	7
379638	P.T.O. Tag	1

328591-55X	Pump Conv. Kit "XD"	
21-P-628	Pump Flange	1
28-P-216	Oil Seal	1
3-P-283	Pump Shaft	1
329195X	Bearing Cap Ass'y	1
378391	Lock/Retaining	2
378447-6	Socket Head	7
379638	P.T.O. Tag	1
379688	Lubricant Spline	1
22-P-127-1	Bearing Cone	2
22-P-127-2	Bearing Cone	2
22-P-127-3	Bearing Cone	1

328591-56X	Pump Conv. Kit "XD"	
21-P-572	Flange Pump	1
28-P-216	Oil Seal	1
3-P-283	Pump Shaft	1
329195X	Bearing Cap Ass'y	1
378391	Lock/Retaining	2
378447-6	Socket Head	7
379638	P.T.O. Tag	1
379688	Lubricant Spline	1
22-P-127-1	Bearing Cone	2
22-P-127-2	Bearing Cone	2
22-P-127-3	Bearing Cone	1

328591-70X	"AZ" Pump Conversion	
379688	Lubricant Spline	1
378447-11	Capscrew	4
3-P-844	Output Shaft	1
378391	Lock/Retaining	2
329052X	Bearing Cap	1
28-P-275	Oil Seal	1
22-P-127-1	Bearing Cone	2
22-P-127-2	Bearing Cone	2
22-P-127-3	Bearing Cone	1

328591-71X	Pump Conversion Kit	
28-P-219	Oil Seal	1
329088X	Flange Assembly	1
378391	Lock/Retaining	2
378447-10	Capscrew	4
28-P-268	Oil Seal	1
328273X	Bearing Cap	1
3-P-921X	Drive Shaft Ass'y	1
379688	Lubricant Spline	1
3-P-921	Drive Shaft	1
500168-2	Fitting	1
379819	Grease Fit	1
22-P-127-1	Bearing Cone	2
22-P-127-2	Bearing Cone	2
22-P-127-3	Bearing Cone	1

328591-72X	Pump Conversion Kit	
378447-6	Socket Head	7
329195X	Bearing Cap Ass'y	1
379638	P.T.O. Tag	1
328273X	Bearing Cap	1
28-P-268	Oil Seal	1
3-P-923X	Drive Shaft Ass'y	1
3-P-923	Drive Shaft	1
379688	Lubricant Spline	1
500168-2	Fitting	1
379819	Grease Fit	1
28-P-216	Oil Seal	1
378391	Lock/Retaining	2
21-P-628	Pump Flange	1
22-P-127-1	Bearing Cone	2
22-P-127-2	Bearing Cone	2
22-P-127-3	Bearing Cone	1

Continued on Next Page

328591-73X Pump Conversion Kit

378391	Lock/Retaining	2
379638	P.T.O. Tag	1
3-P-923X	Drive Shaft Ass'y	1
3-P-923	Drive Shaft	1
379688	Lubricant Spline	1
500168-2	Fitting	1
379819	Grease Fit	1
328273X	Bearing Cap	1
28-P-268	Oil Seal	1
21-P-628	Pump Flange	1
378447-6	Socket Head	7
22-P-127-1	Bearing Cone	2
22-P-127-2	Bearing Cone	2
22-P-127-3	Bearing Cone	1

328591-74X Pump Conversion Kit

3-P-923X	Drive Shaft Ass'y	1
3-P-923	Drive Shaft	1
379688	Lubricant Spline	1
500168-2	Fitting	1
379819	Grease Fit	1
328273X	Bearing Cap	1
28-P-268	Oil Seal	1
28-P-216	Oil Seal	1
329195X	Bearing Cap Ass'y	1
378391	Lock/Retaining	2
378447-6	Socket Head	7
379638	P.T.O. Tag	1
21-P-572	Flange Pump	1
22-P-127-1	Bearing Cone	2
22-P-127-2	Bearing Cone	2
22-P-127-3	Bearing Cone	1

328591-75X Pump Conversion Kit

21-P-572	Flange Pump	1
378447-6	Socket Head	7
379638	P.T.O. Tag	1
3-P-923X	Drive Shaft Ass'y	1
3-P-923	Drive Shaft	1
379688	Lubricant Spline	1
500168-2	Fitting	1
379819	Grease Fit	1
328273X	Bearing Cap	1
28-P-268	Oil Seal	1
378391	Lock/Retaining	2
22-P-127-1	Bearing Cone	2
22-P-127-2	Bearing Cone	2
22-P-127-3	Bearing Cone	1

328591-76X Pump Conversion Kit

3-P-923X	Drive Shaft Ass'y	1
3-P-923	Drive Shaft	1
379688	Lubricant Spline	1
500168-2	Fitting	1
379819	Grease Fit	1
328273X	Bearing Cap	1
28-P-268	Oil Seal	1
28-P-216	Oil Seal	1
328711X	Pump Mount	1
329194X	Bearing Cap Ass'y	1
378391	Lock/Retaining	2
379063	Flat Washer	4
379673	Stud	4
22-P-127-1	Bearing Cone	2
22-P-127-2	Bearing Cone	2
22-P-127-3	Bearing Cone	1

328591-78X Pump Conversion Kit

21-P-626	Pump Flange	1
28-P-219	Oil Seal	1
3-P-924	Output Shaft	1
329264X	Bearing Cap Ass'y	1
378391	Lock/Retaining	2
378447-6	Socket Head	7
379688	Lubricant Spline	1
379638	P.T.O. Tag	1
28-P-271	O-Ring	1
22-P-127-1	Bearing Cone	2
22-P-127-2	Bearing Cone	2
22-P-127-3	Bearing Cone	1

328591-86X Conversion Kit To "GK"

378447-8	Socket Head	4
28-P-216	Oil Seal	1
378391	Lock/Retaining	2
328273X	Bearing Cap	1
28-P-268	Oil Seal	1
3-P-933X	Output Shaft	1
379819	Grease Fit	1
500168-2	Fitting	1
3-P-933	Output Shaft	1
379688	Lubricant Spline	1
22-P-127-1	Bearing Cone	2
22-P-127-2	Bearing Cone	2
22-P-127-3	Bearing Cone	1

Continued on Next Page

328591-88X Conversion Kit "AZ" To "GZ"

378391	Lock/Retaining	2
328273X	Bearing Cap	1
28-P-268	Oil Seal	1
378447-8	Socket Head	4
3-P-939X	Output Shaft	1
379688	Lubricant Spline	1
3-P-939	Output Shaft	1
379819	Grease Fit	1
500168-2	Fitting	1
28-P-275	Oil Seal	1
22-P-127-1	Bearing Cone	2
22-P-127-2	Bearing Cone	2
22-P-127-3	Bearing Cone	1

328591-89X Conversion Kit "XD" To "GK"

328273X	Bearing Cap	1
3-P-933X	Output Shaft	1
379819	Grease Fit	1
500168-2	Fitting	1
3-P-933	Output Shaft	1
379688	Lubricant Spline	1
28-P-268	Oil Seal	1
378391	Lock/Retaining	2
328333X	Flange Assembly	1
378447-8	Socket Head	4
22-P-127-1	Bearing Cone	2
22-P-127-2	Bearing Cone	2
22-P-127-3	Bearing Cone	1

328591-90X Conversion Kit "XD" To "GP"

378447-8	Socket Head	4
28-P-268	Oil Seal	1
28-P-216	Oil Seal	1
378391	Lock/Retaining	2
328328X	Flange Assembly	1
328273X	Bearing Cap	1
3-P-933X	Output Shaft	1
379819	Grease Fit	1
500168-2	Fitting	1
3-P-933	Output Shaft	1
379688	Lubricant Spline	1
22-P-127-1	Bearing Cone	2
22-P-127-2	Bearing Cone	2
22-P-127-3	Bearing Cone	1

328591-91X Conversion Kit "XD" To "GQ"

378391	Lock/Retaining	2
328589X	Bearing Cap	1
28-P-216	Oil Seal	1
28-P-268	Oil Seal	1
328273X	Bearing Cap	1
378447-8	Socket Head	4
3-P-933X	Output Shaft	1
379819	Grease Fit	1
500168-2	Fitting	1
3-P-933	Output Shaft	1
379688	Lubricant Spline	1
22-P-127-1	Bearing Cone	2
22-P-127-2	Bearing Cone	2
22-P-127-3	Bearing Cone	1

328591-92X Conversion Kit "XD" To "GY"

28-P-275	Oil Seal	1
378391	Lock/Retaining	2
329234X	Bearing Cap	1
378447-6	Socket Head	4
328273X	Bearing Cap	1
28-P-268	Oil Seal	1
3-P-938X	Output Shaft	1
500168-2	Fitting	1
379688	Lubricant Spline	1
3-P-938	Output Shaft	1
379819	Grease Fit	1
22-P-127-1	Bearing Cone	2
22-P-127-2	Bearing Cone	2
22-P-127-3	Bearing Cone	1

328591-93X Conversion Kit "XD" To "GZ"

378391	Lock/Retaining	2
329052X	Bearing Cap	1
328273X	Bearing Cap	1
28-P-268	Oil Seal	1
378447-11	Capscrew	4
3-P-939X	Output Shaft	1
379688	Lubricant Spline	1
3-P-939	Output Shaft	1
379819	Grease Fit	1
500168-2	Fitting	1
28-P-275	Oil Seal	1
22-P-127-1	Bearing Cone	2
22-P-127-2	Bearing Cone	2
22-P-127-3	Bearing Cone	1

Continued on Next Page

328591-106X Conversion Kit "RA" To "GA"

28-P-268	Oil Seal	1
328273X	Bearing Cap	1
378391	Lock/Retaining	2
28-P-216	Oil Seal-2	1
3-P-923X	Drive Shaft Ass'y	1
3-P-923	Drive Shaft	1
379688	Lubricant Spline	1
500168-2	Fitting	1
379819	Grease Fit	1
378447-6	Socket Head	7
22-P-127-1	Bearing Cone	2
22-P-127-2	Bearing Cone	2
22-P-127-3	Bearing Cone	1

328591-107X Conversion Kit "RB" To "GB"

3-P-923X	Drive Shaft Ass'y	1
3-P-923	Drive Shaft	1
379688	Lubricant Spline	1
500168-2	Fitting	1
379819	Grease Fit	1
378447-6	Socket Head	7
28-P-268	Oil Seal	1
28-P-216	Oil Seal	1
328273X	Bearing Cap	1
378391	Lock/Retaining	2
22-P-127-1	Bearing Cone	2
22-P-127-2	Bearing Cone	2
22-P-127-3	Bearing Cone	1

328591-108X Conversion Kit "AF" To "GF"

28-P-268	Oil Seal	1
28-P-219	Oil Seal	1
328273X	Bearing Cap	1
378391	Lock/Retaining	2
378447-10	Capscrew	4
3-P-921X	Drive Shaft Ass'y	1
379688	Lubricant Spline	1
3-P-921	Drive Shaft	1
500168-2	Fitting	1
379819	Grease Fit	1
22-P-127-1	Bearing Cone	2
22-P-127-2	Bearing Cone	2
22-P-127-3	Bearing Cone	1

328591-112X Conversion Kit "XD" To "RC"

329322X	Bearing Cap	1
28-P-216	Oil Seal	1
3-P-800	Pump Shaft	1
378391	Lock/Retaining	2
379638	P.T.O. Tag	1
378447-6	Socket Head	4
379688	Lubricant Spline	1
378446-4	Screw, Socket	6
21-P-638	Pump Flange	1
22-P-127-1	Bearing Cone	2
22-P-127-2	Bearing Cone	2
22-P-127-3	Bearing Cone	1

328591-113X Conversion Kit "XD" To "RD"

21-P-638	Pump Flange	1
329322X	Bearing Cap	1
378391	Lock/Retaining	2
378447-6	Socket Head	4
379638	P.T.O. Tag	1
379688	Lubricant Spline	1
378446-4	Screw, Socket	6
28-P-216	Oil Seal	1
3-P-282	Pump Shaft	1
22-P-127-1	Bearing Cone	2
22-P-127-2	Bearing Cone	2
22-P-127-3	Bearing Cone	1

328591-114X Conversion Kit "RF" To "GH"

378447-6	Socket Head	7
378391	Lock/Retaining	2
28-P-219	Oil Seal	1
28-P-268	Oil Seal	1
328273X	Bearing Cap	1
3-P-941X	Drive Shaft	1
3-P-941	Drive Shaft	1
379688	Lubricant Spline	1
379819	Grease Fit	1
500168-2	Fitting	1
22-P-127-1	Bearing Cone	2
22-P-127-2	Bearing Cone	2
22-P-127-3	Bearing Cone	1

Continued on Next Page

328591-116X Conversion Kit "XD" To "GH"

28-P-219	Oil Seal	1
378447-6	Socket Head	7
378391	Lock/Retaining	2
21-P-626	Pump Flange	1
329264X	Bearing Cap Ass'y	1
328273X	Bearing Cap	1
28-P-268	Oil Seal	1
28-P-271	O-Ring	1
3-P-941X	Drive Shaft	1
3-P-941	Drive Shaft	1
379688	Lubricant Spline	1
379819	Grease Fit	1
500168-2	Fitting	1
22-P-127-1	Bearing Cone	2
22-P-127-2	Bearing Cone	2
22-P-127-3	Bearing Cone	1

328591-121X Conversion Kit "XD" To "XY"

28-P-275	Oil Seal	1
3-P-768	Shaft Output ("XY")	1
329234X	Bearing Cap	1
378447-6	Socket Head	4
378391	Lock/Retaining	2
22-P-127-1	Bearing Cone	2
22-P-127-2	Bearing Cone	2
22-P-127-3	Bearing Cone	1

328591-122X Conversion Kit "XD" To "XX"

501181	Hex Nut	1
3-P-766	Shaft Earby	1
28-P-216	Oil Seal	1
379111	SQ. Key 50	1
378447-6	Socket Head	4

328591-130X Conversion Kit "XD" To "XV"

379828	Companion	1
378454-7	Setscrew	1

328591-131X Conversion Kit "XD" To "RY"

378447-8	Socket Head	4
21-P-625	Output Cover	1
3-P-768	Shaft Output ("XY")	1
378391	Lock/Retaining	1
329356X	Bearing Cap Ass'y	1
329355-1X	Loose Part	1
22-P-127-1	Bearing Cone	2
22-P-127-2	Bearing Cone	2
22-P-127-3	Bearing Cone	1

328591-134X Pump Conv Kit "XD" To "RE"

21-P-654	Pump Flange	1
329264X	Bearing Cap Ass'y	1
378391	Lock/Retaining	1
378447-6	Socket Head	7
379638	P.T.O. Tag	1
379688	Lubricant Spline	1
22-P-127-2	Bearing Cone	2
28-P-219	Oil Seal	1
28-P-271	O-Ring	1
3-P-924	Output Shaft	1
22-P-127-1	Bearing Cone	2
22-P-127-2	Bearing Cone	2
22-P-127-3	Bearing Cone	1

328591-138X Conversion Kit "XD" To "GJ"

28-P-271	O-Ring	1
328273X	Bearing Cap	1
378447-6	Socket Head	7
378391	Lock/Retaining	2
329264X	Bearing Cap Ass'y	1
28-P-219	Oil Seal	1
21-P-654	Pump Flange	1
28-P-268	Oil Seal	1
3-P-941X	Drive Shaft	1
3-P-941	Drive Shaft	1
379688	Lubricant Spline	1
379819	Grease Fit	1
500168-2	Fitting	1

328591-142X Pump Conversion Kit "XD" To "PF"

28-P-219	Oil Seal	1
3-P-924	Output Shaft	1
329264X	Bearing Cap Ass'y	1
378391	Lock/Retaining	1
378447-6	Socket Head	7
379688	Lubricant Spline	1
379638	P.T.O. Tag	1
28-P-271	O-Ring	1
21-P-661	Pump Flange	1
22-P-127-1	Bearing Cone	2
22-P-127-2	Bearing Cone	2
22-P-127-3	Bearing Cone	1

328591-143X Pump Conversion Kit "XD" To "PA"

378447-6	Socket Head	7
378391	Lock/Retaining	2
21-P-661	Pump Flange	1
28-P-216	Oil Seal	1
329195X	Bearing Cap Ass'y	1
3-P-283	Pump Shaft	1
379638	P.T.O. Tag	1
379688	Lubricant Spline	1
22-P-127-1	Bearing Cone	2
22-P-127-2	Bearing Cone	2
22-P-127-3	Bearing Cone	1

Continued on Next Page

328591-149X	"SQ" Pump Conversion	
28-P-216	Oil Seal	1
3-P-282	Pump Shaft	1
329449X	Bearing Cap	1
378391	Lock/Retaining	2
378447-8	Socket Head	4
379688	Lubricant Spline	1
22-P-127-1	Bearing Cone	2
22-P-127-2	Bearing Cone	2
22-P-127-3	Bearing Cone	1

328594-13X	Bearing and Spacer Kit (Non-Pressure Lube)	
14-P-73-1	Spacer, Idler Gear (.149" - .151")	1
14-P-73-2	Spacer, Idler Gear (.152" - .154")	1
14-P-73-3	Spacer, Idler Gear (.155" - .157")	1
28-P-191	O-Ring	1
31-P-102	Thrust Washer, Bearing	1
379672	NWD Plug	1
550439	Bearing	2
9-P-88	Shaft, Idler	1

328594-14X	Bearing and Spacer Kit (Pressure Lube)	
14-P-73-1	Spacer, Idler Gear (.149" - .151")	1
14-P-73-2	Spacer, Idler Gear (.152" - .154")	1
14-P-73-3	Spacer, Idler Gear (.155" - .157")	1
28-P-191	O-Ring	1
31-P-102	Thrust Washer	1
379672	NWD Plug	1
500841-1	Street Elbow 90°	1
500897-5	Shipping Plug	1
550439	Bearing	2
9-P-89	Shaft, Idler	1

328594-15X	Bearing and Spacer Kit (Non-Pressure Lube "A", "B" & "C" Ratio)	
14-P-73-1	Spacer, Idler Gear (.149" - .151")	1
14-P-73-2	Spacer, Idler Gear (.152" - .154")	1
14-P-73-3	Spacer, Idler Gear (.155" - .157")	1
14-P-75	Spacer, Input Bearing	1
28-P-191	O-Ring	1
31-P-102	Thrust Washer	1
379672	Plug, NWD	1
550890	Needle Bearing	1
561006	Bearing	1
9-P-88	Shaft, Idler	1

328594-16X	Bearing and Spacer Kit (Pressure Lube "A", "B" & "C" Ratio)	
14-P-73-1	Spacer, Idler Gear (.149" - .151")	1
14-P-73-2	Spacer, Idler Gear (.152" - .154")	1
14-P-73-3	Spacer, Idler Gear (.155" - .157")	1
14-P-75	Spacer, Input Bearing	1
28-P-191	O-Ring	1
31-P-102	Thrust Washer	1
379672	Plug, NWD	1
500841-1	Street Elbow 90°	1
500897-5	Plug, Shipping	1
550890	Needle Bearing	1
561006	Bearing	1
9-P-89	Shaft, Idler	1

328751-1X	Installation Kit ("C", "H", "W", "X", "Y")	
68-P-18	Name Plate	1
378978	Indicator Light, 12V	1
379900	Fuse Holder, 10-Amp	1
379252	Butt Connector	2
379640	Booted Connector ("V" Shifter Option)	1

328948-6X	(442 Series)	
35-P-9-1	Mounting Gasket .010"	2
35-P-9-2	Mounting Gasket .020"	2
379085-1	P.T.O. Instruction Decal	1
328946X	Caution Label Kit	1
379624	Product Warranty Card	1
Owners Manual	HY25-1135-M1/US	1
Safety Guide	HY25-1002-M1/US	1

328948-8X	(489 Series)	
328946X	Caution Label Kit	1
35-P-15-1	Gasket, Housing .010"	2
35-P-15-2	Gasket, Housing .020"	2
379085-1	P.T.O. Instructions Decal	1
379624	Product Warranty Card	1
Owners Manual	HY25-1135-M1/US	1
Safety Guide	HY25-1002-M1/US	1

7170-72X	Stud Kit, Metric (442 Series)	
379428-14	Stud M10	6
379744	Flange Nut	6

Air Shift Installation Sketch for 442 & 489 Series (SK-462 Rev A)

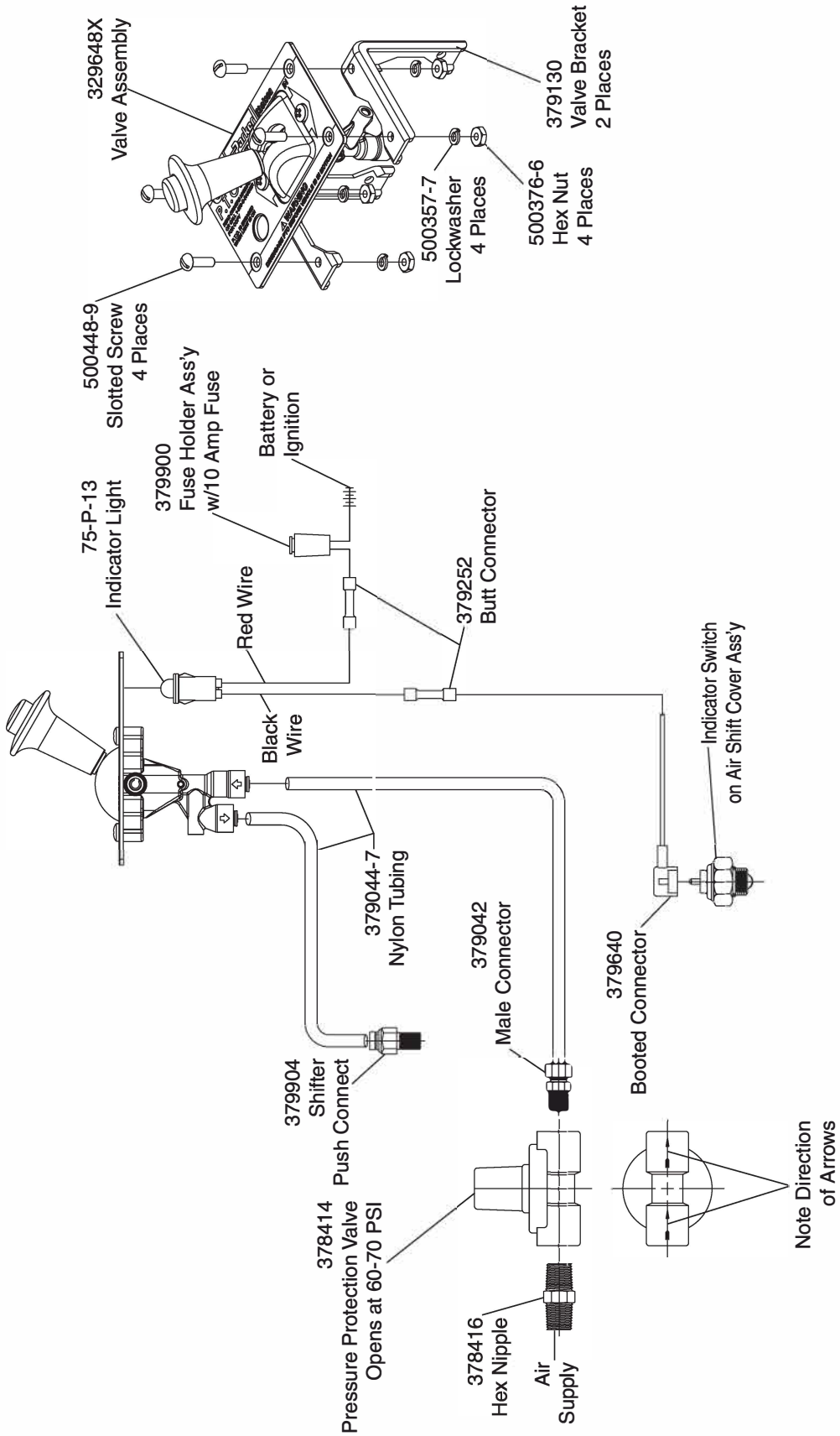

328388-98X Installation Kit
See SK-204 Drilling Template for Control Plate

NOTE: When this installation is used on vehicles with automatic transmissions the P.T.O. drive must be stopped before shifting.

CAUTION: When installing nylon tubing avoid sharp angles, exhaust and manifold systems.

Pro Gear and Transmission, Inc. | 906 West Gore St, Orlando, FL 32805
+1 (877) 776-4600 | +1 (407) 872-1901
www.progearandtransmission.com | www.pgttruckparts.com | parts@eprogear.com

Notes

Notes

Offer of Sale

The items described in this document and other documents and descriptions provided by Parker Hannifin Corporation, its subsidiaries and its authorized distributors ("Seller") are hereby offered for sale at prices to be established by Seller. This offer and its acceptance by any customer ("Buyer") shall be governed by all of the following Terms and Conditions. Buyer's order for any item described in its document, when communicated to Seller verbally, or in writing, shall constitute acceptance of this offer. All goods, services or work described will be referred to as "Products".

1. Terms and Conditions. Seller's willingness to offer Products, or accept an order for Products, to or from Buyer is subject to these Terms and Conditions or any newer version of the terms and conditions found on-line at www.parker.com/saleterms/. Seller objects to any contrary or additional terms or conditions of Buyer's order or any other document issued by Buyer.

2. Price Adjustments; Payments. Prices stated on Seller's quote or other documentation offered by Seller are valid for 30 days, and do not include any sales, use, or other taxes unless specifically stated. Unless otherwise specified by Seller, all prices are F.C.A. Seller's facility (INCOTERMS 2010). Payment is subject to credit approval and is due 30 days from the date of invoice or such other term as required by Seller's Credit Department, after which Buyer shall pay interest on any unpaid invoices at the rate of 1.5% per month or the maximum allowable rate under applicable law.

3. Delivery Dates; Title and Risk; Shipment. All delivery dates are approximate and Seller shall not be responsible for any damages resulting from any delay. Regardless of the manner of shipment, title to any products and risk of loss or damage shall pass to Buyer upon placement of the products with the shipment carrier at Seller's facility. Unless otherwise stated, Seller may exercise its judgment in choosing the carrier and means of delivery. No deferment of shipment at Buyers' request beyond the respective dates indicated will be made except on terms that will indemnify, defend and hold Seller harmless against all loss and additional expense. Buyer shall be responsible for any additional shipping charges incurred by Seller due to Buyer's acts or omissions.

4. Warranty. Parker Chelsea warrants that all products sold conform to the applicable Parker Chelsea standard specification for the lesser period of: 2 years (24 Months) from Date of service or 2-1/2 years(30 Months) from date of build (as marked on the product name plate). The prices charged for Seller's products are based upon the exclusive limited warranty stated above, and upon the following disclaimer: **DISCLAIMER OF WARRANTY: THIS WARRANTY COMPRISES THE SOLE AND ENTIRE WARRANTY PERTAINING TO PRODUCTS PROVIDED HEREUNDER. SELLER DISCLAIMS ALL OTHER WARRANTIES, EXPRESS AND IMPLIED, INCLUDING DESIGN, MERCHANTABILITY AND FITNESS FOR A PARTICULAR PURPOSE.**

5. Claims; Commencement of Actions. Buyer shall promptly inspect all Products upon delivery. No claims for shortages will be allowed unless reported to the Seller within 10 days of delivery. No other claims against Seller will be allowed unless asserted in writing within 30 days after delivery. Buyer shall notify Seller of any alleged breach of warranty within 30 days after the date the defect is or should have been discovered by Buyer. Any action based upon breach of this agreement or upon any other claim arising out of this sale (other than an action by Seller for an amount due on any invoice) must be commenced within 12 months from the date of the breach without regard to the date breach is discovered.

6. LIMITATION OF LIABILITY. UPON NOTIFICATION, SELLER WILL, AT ITS OPTION, REPAIR OR REPLACE A DEFECTIVE PRODUCT, OR REFUND THE PURCHASE PRICE. IN NO EVENT SHALL SELLER BE LIABLE TO BUYER FOR ANY SPECIAL, INDIRECT, INCIDENTAL OR CONSEQUENTIAL DAMAGES ARISING OUT OF, OR AS THE RESULT OF, THE SALE, DELIVERY, NON-DELIVERY, SERVICING, USE OR LOSS OF USE OF THE PRODUCTS OR ANY PART THEREOF, OR FOR ANY CHARGES OR EXPENSES OF ANY NATURE INCURRED WITHOUT SELLER'S WRITTEN CONSENT, EVEN IF SELLER HAS BEEN NEGLIGENT, WHETHER IN CONTRACT, TORT OR OTHER LEGAL THEORY. IN NO EVENT SHALL SELLER'S LIABILITY UNDER ANY CLAIM MADE BY BUYER EXCEED THE PURCHASE PRICE OF THE PRODUCTS.

7. User Responsibility. The user, through its own analysis and testing, is solely responsible for making the final selection of the system and Product and assuring that all performance, endurance, maintenance, safety and warning requirements of the application are met. The user must analyze all aspects of the application and follow applicable industry standards and Product information. If Seller provides Product or system options, the user is responsible for determining that such data and specifications are suitable and sufficient for all applications and reasonably foreseeable uses of the Products or systems.

8. Loss to Buyer's Property. Any designs, tools, patterns, materials, drawings, confidential information or equipment furnished by Buyer or any other items which become Buyer's property, will be considered obsolete and may be destroyed by Seller after two consecutive years have elapsed without Buyer ordering the items manufactured using such property. Seller shall not be responsible for any loss or damage to such property while it is in Seller's possession or control.

9. Special Tooling. A tooling charge may be imposed for any special tooling, including without limitation, dies, fixtures, molds and patterns, acquired to manufacture Products. Such special tooling shall be and remain Seller's property notwithstanding payment of any charges by Buyer. In no event will Buyer acquire any interest in apparatus belonging to Seller which is utilized in the manufacture of the Products, even if such apparatus has been specially converted or adapted for such manufacture and notwithstanding any charges paid by Buyer. Unless otherwise agreed, Seller shall have the right to alter, discard or otherwise dispose of any special tooling or other property in its sole discretion at any time.

10. Buyer's Obligation; Rights of Seller. To secure payment of all sums due or otherwise, Seller shall retain a security interest in the goods delivered and this agreement shall be deemed a Security Agreement under the Uniform Commercial Code. Buyer authorizes Seller as its attorney to execute and file on Buyer's behalf all documents Seller deems necessary to perfect its security interest.

11. Improper use and Indemnity. Buyer shall indemnify, defend, and hold Seller harmless from any claim, liability, damages, lawsuits, and costs (including attorney fees), whether for personal injury, property damage, patent, trademark or copyright infringement or any other claim, brought by or incurred by Buyer, Buyer's employees, or any other person, arising out of: (a) improper selection, improper application or other misuse of Products purchased by Buyer from Seller; (b) any act or omission, negligent or otherwise, of Buyer; (c) Seller's use of patterns, plans, drawings, or specifications furnished by Buyer to manufacture Product; or (d) Buyer's failure to comply with these terms and conditions. Seller shall not indemnify Buyer under any circumstance except as otherwise provided.

12. Cancellations and Changes. Orders shall not be subject to cancellation or change by Buyer for any reason, except with Seller's written consent and upon terms that will indemnify, defend and hold Seller harmless against all direct, incidental and consequential loss or damage. Seller may change product features, specifications, designs and availability with notice to Buyer.

13. Limitation on Assignment. Buyer may not assign its rights or obligations under this agreement without the prior written consent of Seller.

14. Force Majeure. Seller does not assume the risk and shall not be liable for delay or failure to perform any of Seller's obligations by reason of circumstances beyond the reasonable control of Seller (hereinafter "Events of Force Majeure"). Events of Force Majeure shall include without limitation: accidents, strikes or labor disputes, acts of any government or government agency, acts of nature, delays or failures in delivery from carriers or suppliers, shortages of materials, or any other cause beyond Seller's reasonable control.

15. Waiver and Severability. Failure to enforce any provision of this agreement will not waive that provision nor will any such failure prejudice Seller's right to enforce that provision in the future. Invalidation of any provision of this agreement by legislation or other rule of law shall not invalidate any other provision herein. The remaining provisions of this agreement will remain in full force and effect.

16. Termination. Seller may terminate this agreement for any reason and at any time by giving Buyer thirty (30) days written notice of termination. Seller may immediately terminate this agreement, in writing, if Buyer: (a) commits a breach of any provision of this agreement (b) appointments a trustee, receiver or custodian for all or any part of Buyer's property (c) files a petition for relief in bankruptcy on its own behalf, or by a third party (d) makes an assignment for the benefit of creditors, or (e) dissolves or liquidates all or a majority of its assets.

17. Governing Law. This agreement and the sale and delivery of all Products hereunder shall be deemed to have taken place in and shall be governed and construed in accordance with the laws of the State of Ohio, as applicable to contracts executed and wholly performed therein and without regard to conflicts of laws principles. Buyer irrevocably agrees and consents to the exclusive jurisdiction and venue of the courts of Cuyahoga County, Ohio with respect to any dispute, controversy or claim arising out of or relating to this agreement.

18. Indemnity for Infringement of Intellectual Property Rights. Seller shall have no liability for infringement of any patents, trademarks, copyrights, trade dress, trade secrets or similar rights except as provided in this Section. Seller will defend and indemnify Buyer against allegations of infringement of U.S. patents, U.S. trademarks, copyrights, trade dress and trade secrets ("Intellectual Property Rights"). Seller will defend at its expense and will pay the cost of any settlement or damages awarded in an action brought against Buyer based on an allegation that a Product sold pursuant to this Agreement infringes the Intellectual Property Rights of a third party. Seller's obligation to defend and indemnify Buyer is contingent on Buyer notifying Seller within ten (10) days after Buyer becomes aware of such allegations of infringement, and Seller having sole control over the defense of any allegations or actions including all negotiations for settlement or compromise. If a Product is subject to a claim that it infringes the Intellectual Property Rights of a third party, Seller may, at its sole expense and option, procure for Buyer the right to continue using the Product, replace or modify the Product so as to make it noninfringing, or offer to accept return of the Product and return the purchase price less a reasonable allowance for depreciation. Notwithstanding the foregoing, Seller shall have no liability for claims of infringement based on information provided by Buyer, or directed to Products delivered hereunder for which the designs are specified in whole or part by Buyer, or infringements resulting from the modification, combination or use in a system of any Product sold hereunder. The foregoing provisions of this Section shall constitute Seller's sole and exclusive liability and Buyer's sole and exclusive remedy for infringement of Intellectual Property Rights.

19. Entire Agreement. This agreement contains the entire agreement between the Buyer and Seller and constitutes the final, complete and exclusive expression of the terms of sale. All prior or contemporaneous written or oral agreements or negotiations with respect to the subject matter are herein merged.

20. Compliance with Law, U. K. Bribery Act and U.S. Foreign Corrupt Practices Act. Buyer agrees to comply with all applicable laws and regulations, including both those of the United Kingdom and the United States of America, and of the country or countries of the Territory in which Buyer may operate, including without limitation the U. K. Bribery Act, the U.S. Foreign Corrupt Practices Act ("FCPA") and the U.S. Anti-Kickback Act (the "Anti-Kickback Act"), and agrees to indemnify and hold harmless Seller from the consequences of any violation of such provisions by Buyer, its employees or agents. Buyer acknowledges that they are familiar with the provisions of the U. K. Bribery Act, the FCPA and the Anti-Kickback Act, and certifies that Buyer will adhere to the requirements thereof. In particular, Buyer represents and agrees that Buyer shall not make any payment or give anything of value, directly or indirectly to any governmental official, any foreign political party or official thereof, any candidate for foreign political office, or any commercial entity or person, for the purpose of influencing such person to purchase products or otherwise benefit the business of Seller.

Parker Hannifin Corporation
Chelsea Products Division
8225 Hacks Cross Road
Olive Branch, Mississippi 38654 USA
Tel: (662) 895-1011
Fax: (662) 890-5379
www.parker.com/chelsea

TGI 01/11

Pro Gear and Transmission, Inc. | 906 West Gore St, Orlando, FL 32805
+1 (877) 776-4600 | +1 (407) 872-1901
www.progearandtransmission.com | www.pgttruckparts.com | parts@eprogear.com