Chelsea PTO 630 Parts Manual

Pro Gear and Transmission presents Chelsea 630 Series PTO parts manual to assist in identifying the parts for your Chelsea Power Take Off unit.

If you need any assistance identifying the correct Power Take Off unit for your truck and equipment, contact your Chelsea replacement part specialists at Pro Gear and Transmission.

Pro Gear stocks every part for your Parker Chelsea PTO including: PTO housings, mounts, driveshafts, gears, bearings, gaskets, cable shift cover assembly, post and plate assembly, brackets, stud kits, seal kits, lever control assembly, air shift cover assembly, direct mount pump conversion kits, stud kits including English and metric references, CAT D&H parts and much more.

Pro Gear Transmission has same day shipping and 1000's of products in stock and ready to ship internationally for your next project.

For parts or service contact the Chelsea specialists at Pro Gear & Transmission, Inc.

1 (877) 776-4600
(407) 872-1901
parts@eprogear.com

Check Inventory | Email Us | Call Us

CHELSEA®

CLICK TO RETURN TO SITE

Parts List 626, 628, 630, 645 Series

Bulletin HY25-2626-M1/US

Effective: September 15, 2006
Supersedes: P4216-DSD Dated April 1996

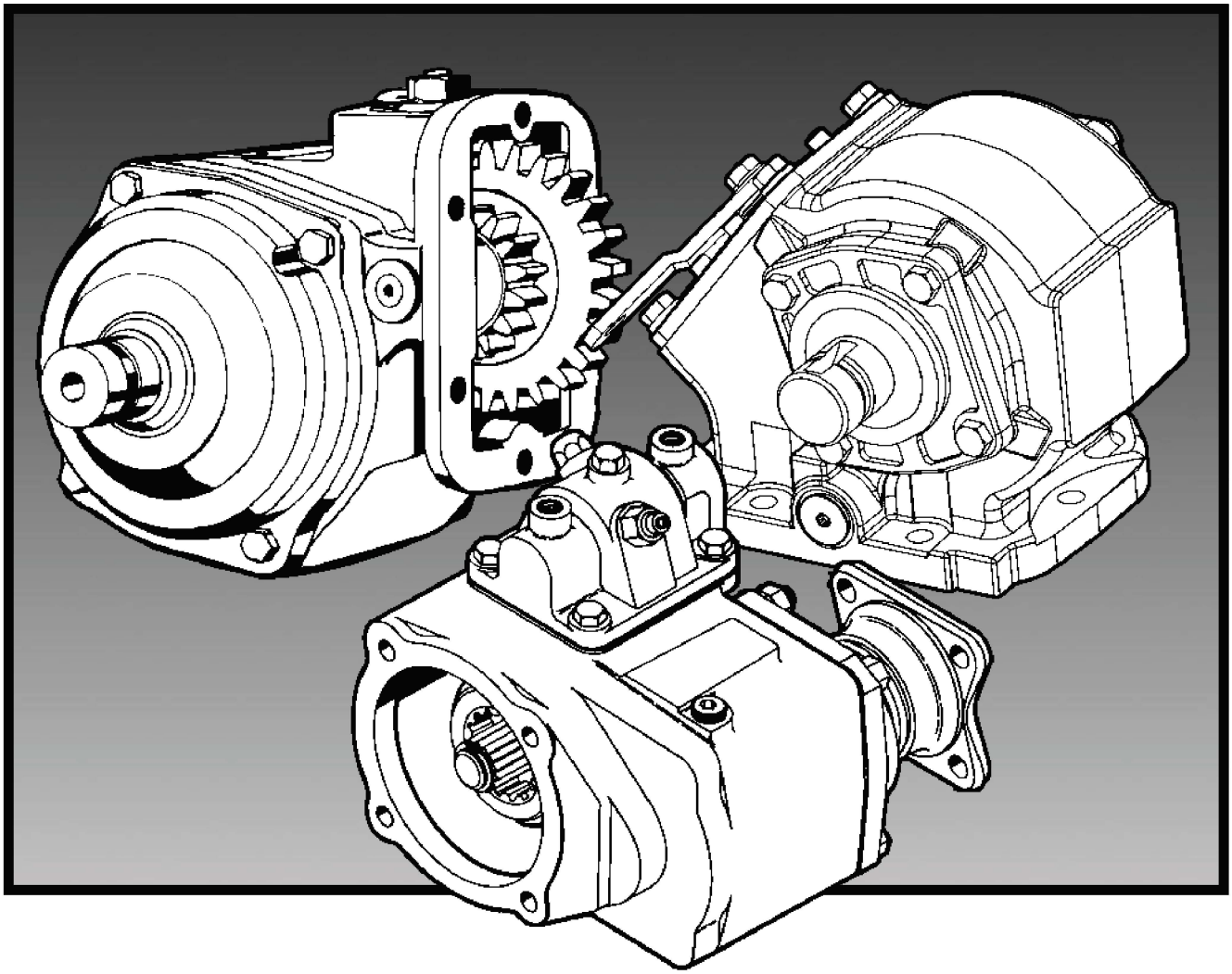

Pro Gear and Transmission, Inc. | 906 West Gore St, Orlando, FL 32805
+1 (877) 776-4600 | +1 (407) 872-1901
www.progearandtransmission.com | www.pgttruckparts.com | parts@eprogear.com

WARNING

FAILURE OR IMPROPER SELECTION OR IMPROPER USE OF THE PRODUCTS AND/OR SYSTEMS DESCRIBED HEREIN OR RELATED ITEMS CAN CAUSE DEATH, PERSONAL INJURY AND PROPERTY DAMAGE.

This document and other information from Parker Hannifin Corporation, its subsidiaries and authorized distributors provide product and/or system options for further investigation by users having technical expertise. It is important that you analyze all aspects of your application and review the information concerning the product or system in the current product catalog. Due to the variety of operating conditions and applications for these products or systems, the user, through its own analysis and testing, is solely responsible for making the final selection of the products and systems and assuring that all performance, safety and warning requirements of the application are met.

The products described herein, including without limitation, product features, specifications, designs, availability and pricing, are subject to change by Parker Hannifin Corporation and its subsidiaries at any time without notice.

Offer of Sale

The items described in this document are hereby offered for sale by Parker Hannifin Corporation, its subsidiaries or its authorized distributors. This offer and its acceptance are governed by the provisions stated in the "Offer of Sale".

© Copyright 2006, Parker Hannifin Corporation, All Rights Reserved

Exploded View 1
Bill of Materials 2
Gear Chart 626 & 628 3
Gear Chart 630 4
Gear Chart 645 5
Model Number Designation 6
Dimensional Drawings 626, 628 6
Dimensional Drawings 630, 645 7
Offer of Sale 8

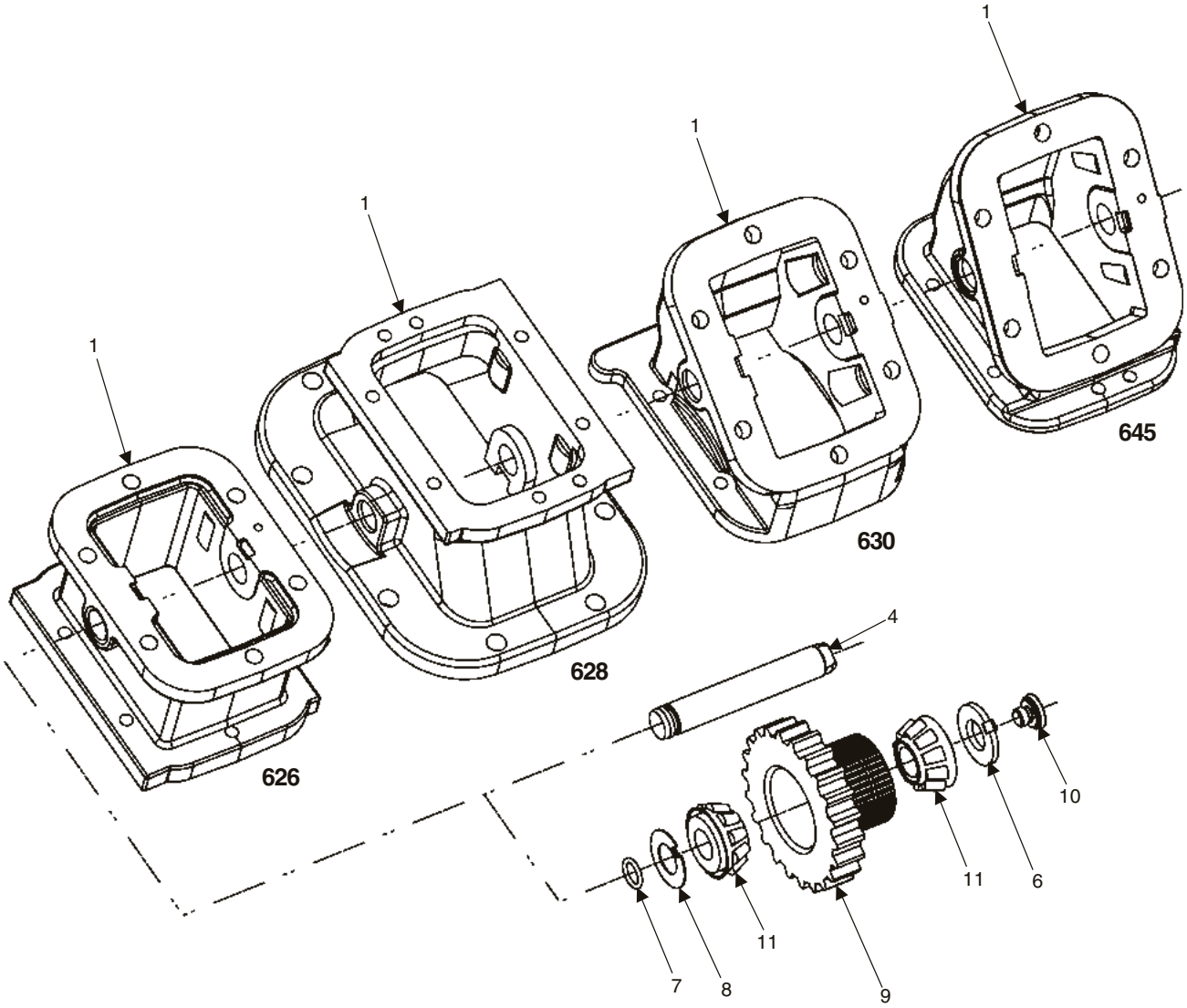
1
1
1
1
645
630
628
626
4
10
11
6
11
7
8
9

Item	Part Number	Description	Series 626	628	630	645
1	**42-P-217X**	Adapter Body Assembly - Standard Mount	1 or			
	42-P-220X	Adapter Body Assembly - Standard Mount		1 or		
	42-P-231X	Adapter Body Assembly - Standard Mount			1 or	
	42-P-223X	Adapter Body Assembly - Standard Mount				1 or
N.S.	**42-P-218X**	Adapter Body Assembly - Deep Mount	1			
	42-P-221X	Adapter Body Assembly - Deep Mount		1		
	42-P-232X	Adapter Body Assembly - Deep Mount			1	
	42-P-224X	Adapter Body Assembly - Deep Mount				1
N.S.	**42-P-226XD**	Adapter Body Assembly - Dowel Pin Mount	1			
	42-P-223XD	Adapter Body Assembly - Dowel Pin Mount			1	
	42-P-225XD	Adapter Body Assembly - Dowel Pin Mount				1
4	**9-P-88**	Idler Shaft	1 or	1 or	1 or	1 or
N.S.	**9-P-89**	Idler Shaft (Pressure Lube Option)	1	1	1	1
6	**14-P-73-1**	Bearing Adjusting Spacer (.149" - .151")	A. R.	A. R.	A. R.	A. R.
	14-P-73-2	Bearing Adjusting Spacer (.152" - .154")	A. R.	A. R.	A. R.	A. R.
	14-P-73-3	Bearing Adjusting Spacer (.155" - .157")	A. R.	A. R.	A. R.	A. R.
	14-P-73-4	Bearing Adjusting Spacer (.158" - .160")	A. R.	A. R.	A. R.	A. R.
	14-P-73-5	Bearing Adjusting Spacer (.161" - .163")	A. R.	A. R.	A. R.	A. R.
7	**28-P-191**	O-Ring (For Slip Fit Idler Shaft)	1	1	1	1
8	**31-P-102**	Thrust Washer	1	1	1	1
9	See Gear Chart	Adapter Gear (See Model Designator & Gear Chart)	1	1	1	1
10	**379672**	O-Ring Plug w/ Sockethead Face (NWD Plug)	1	1	1	1
11	**550439**	Tapered Bearing Cone	2	2	2	2
N.S.	**68-P-2**	Name Plate	1	1	1	1
N.S.	**378422**	Drive Screw	2	2	2	2
		Loose Parts				
	328075X	Pressure Lube Hose Assembly	1	1	1	1
	328948-26X	Sealant & Installation Instructions ("D" Mount Only)	1		1	1
	328948-22X	Gasket & Installation Instructions (All Other Mounting Types)	1		1	1
	328948-20X	Gasket & Installation Instructions (All Mounting Types)		1		
	328170-76X	Stud Kit (Adapter to Transmission / Std. Mount)	1 or		1 or	1 or
	328170-77X	Stud Kit (Adapter to Transmission / Deep Mount)	1		1	1
	7170-78X	Stud Kit (Adapter to Transmission / Metric "G" Mount)	1		1	1
	7170-72X	Stud Kit (Adapter to Transmission / Metric "DJA" Mount)	1		1	1
	328170-209X	Stud Kit (Adapter to Transmission / "X" & "Z" Mount)		1 or		
	328170-201X	Stud Kit (Adapter to Transmission / Metric "G" Mount)		1		
	See Chart	Stud Kit (P.T.O. to Adapter)	1	1	1	1
	See Chart	Mounting Spacer (Between Adapter & P.T.O.)	1	1	1	1

N.S. — Not Shown

A.R. — As Required

Model No.	Part No.	Helix Angle	No. Teeth	Spacer Designator	Stud Kit	P.T.O. Pitch	Part No.	Helix Angle	No. Teeth
626*AB	5-P-1001	Spur	19	7-A-140	7170-3X	—**AB	5-P-1001	Spur	19
626*AH	5-P-1004	Spur	22	7-A-140	7170-3X	—**AH	5-P-1004	Spur	22
626*AP	5-P-1006	Left Hand	21	7-A-140	7170-3X	—**GX	5-P-1183	Right Hand	21
626*AR	5-P-1008	Left Hand	21	7-A-187	7170-3X	—**GY	5-P-1184	Right Hand	21
626*AW	5-P-1009	Left Hand	22	7-A-270	7170-4X	—**GZ	5-P-1185	Right Hand	22
626*BG	5-P-1015	Left Hand	23	7-A-140	7170-3X	—**HB	5-P-1187	Right Hand	23
626*BQ	5-P-1023	Left Hand	25	7-A-200	7170-4X	—**BP	5-P-1022	Right Hand	26
626*CB	5-P-1029	Left Hand	25	7-A-140	7170-3X	—**HD	5-P-1189	Right Hand	25
626*CD	5-P-1031	Left Hand	27	7-A-270	7170-4X	—**HE	5-P-1190	Right Hand	27
626*DA	5-P-1037	Spur	23	——	——	—**DA	5-P-1037	Spur	23
626*DU	5-P-1050	Left Hand	28	7-A-240	7170-4X	—**HH	5-P-1193	Right Hand	28
626*ED	5-P-1056	Left Hand	34	7-A-240	7170-4X	—**HK	5-P-1195	Right Hand	34
626*ES	5-P-1059	Left Hand	22	7-A-062	——	—**HL	5-P-1196	Right Hand	22
626*EV	5-P-1060	Spur	40	7-A-300	7170-4X	—**EV	5-P-1060	Spur	40
626*EW	5-P-1061	Left Hand	20	7-A-125	7170-3X	—**HM	5-P-1197	Right Hand	20
626*FC	5-P-1064	Left Hand	26	7-A-165	7170-3X	—**HP	5-P-1199	Right Hand	26
626*HY	5-P-1237	Left Hand	26	7-A-125	7170-1X	—**JB	5-P-1244	Right Hand	26
626*IT	KIT ADAPTER								
626DJA	5-P-1243	Left Hand	27	7-A-165	7170-3X	—**JC	5-P-1247	Right Hand	27
626*JK	5-P-1261	Left Hand	24	7-A-187	7170-3X	—**JL	5-P-1262	Right Hand	24
626*JM	5-P-1263	Left Hand	22	7-A-125	7170-3X	—**JN	5-P-1264	Right Hand	22
626*JU	5-P-1316	Left Hand	25	7-A-200	7170-4X	—**KA	5-P-1318	Right Hand	25
626*JW	5-P-1319	Left Hand	23	7-A-093	7170-3X	—**KB	5-P-1321	Right Hand	23

628 Gear Chart

Model No.	Part No.	Helix Angle	No. Teeth	Spacer Designator	Stud Kit	P.T.O. Pitch	Part No.	Helix Angle	No. Teeth
628*AB	5-P-1001	Spur	19	7-A-140	7170-3X	—**AB	5-P-1001	Spur	19
628*AH	5-P-1004	Spur	22	7-A-165	7170-3X	—**AH	5-P-1004	Spur	22
628*AR	5-P-1008	Left Hand	21	7-A-200	7170-3X	—**GY	5-P-1184	Right Hand	21
628*BG	5-P-1015	Left Hand	23	7-A-165	7170-3X	—**HB	5-P-1187	Right Hand	23
628*DA	5-P-1037	Spur	23	——	7170-2X	—**DA	5-P-1037	Spur	23
628*DU	5-P-1050	Left Hand	28	7-A-270	7170-5X	—**HH	5-P-1193	Right Hand	28
628*EV	5-P-1060	Spur	40	7-A-300	7170-5X	—**EV	5-P-1060	Spur	40

Model No.	Part No.	Helix Angle	No. Teeth	Spacer Designator	Stud Kit	P.T.O. Pitch	Part No.	Helix Angle	No. Teeth
630*AB	5-P-1001	Spur	19	7-A-140	7170-3X	—**AB	5-P-1001	Spur	
630*AH	5-P-1004	Spur	22	7-A-140	7170-3X	—**AH	5-P-1004	Spur	
630*AP	5-P-1006	Left Hand	21	7-A-140	7170-3X	—**GX	5-P-1183	Right Hand	
630*AR	5-P-1008	Left Hand	21	7-A-187	7170-3X	—**GY	5-P-1184	Right Hand	
630*BG	5-P-1015	Left Hand	23	7-A-140	7170-3X	—**HB	5-P-1187	Right Hand	
630*BQ	5-P-1023	Left Hand	25	7-A-200	7170-4X	—**BP	5-P-1022	Right Hand	
630*BS	5-P-1025	Left Hand	26	7-A-062	7170-4X	—**BR	5-P-1024	Right Hand	
630*CD	5-P-1031	Left Hand	27	7-A-270	7170-4X	—**HE	5-P-1190	Right Hand	
630*DA	5-P-1037	Spur	23	———	——	—**DA	5-P-1037	Spur	23
630*DU	5-P-1050	Left Hand	28	7-A-240	7170-4X	—**HH	5-P-1193	Right Hand	28
630*ED	5-P-1056	Left Hand	34	7-A-240	7170-4X	—**HK	5-P-1195	Right Hand	34
630*ES	5-P-1059	Left Hand	22	7-A-062	——	—**HL	5-P-1196	Right Hand	22
630*EV	5-P-1060	Spur	40	7-A-300	7170-4X	—**EV	5-P-1060	Spur	40
630*EW	5-P-1061	Left Hand	20	7-A-125	7170-3X	—**HM	5-P-1197	Right Hand	20
630*FN	5-P-1070	Left Hand	26	7-A-300	7170-4X	—**HR	5-P-1201	Right Hand	26
630*HY	5-P-1237	Left Hand	26	7-A-125	7170-1X	—**JB	5-P-1244	Right Hand	26
630*IT	KIT ADAPTER								
630DJA	5-P-1243	Left Hand	27	7-A-165	7170-3X	—**JC	5-P-1247	Right Hand	27
630*JK	5-P-1261	Left Hand	24	7-A-187	7170-3X	—**JL	5-P-1262	Right Hand	24
630*JM	5-P-1263	Left Hand	22	7-A-125	7170-3X	—**JN	5-P-1264	Right Hand	22
630*JU	5-P-1316	Left Hand	25	7-A-200	7170-4X	—**KA	5-P-1318	Right Hand	25
630*JW	5-P-1319	Left Hand	23	7-A-093	7170-3X	—**KB	5-P-1321	Right Hand	23

Model No.	Part No.	Helix Angle	No. Teeth	Spacer Designator	Stud Kit	P.T.O. Pitch	Part No.	Helix Angle	No. Teeth
645*AB	5-P-1001	Spur	19	7-A-140	7170-3X	—**AB	5-P-1001	Spur	19
645*AG	5-P-1003	Spur	22	7-A-140	7170-3X	—**AG	5-P-1003	Spur	22
645*AH	5-P-1004	Spur	22	7-A-140	7170-3X	—**AH	5-P-1004	Spur	22
645*AP	5-P-1006	Left Hand	21	7-A-140	7170-3X	—**GX	5-P-1183	Right Hand	21
645*AR	5-P-1008	Left Hand	21	7-A-187	7170-3X	—**GY	5-P-1184	Right Hand	21
645*AW	5-P-1009	Left Hand	22	7-A-270	7170-4X	—**GZ	5-P-1185	Right Hand	22
645*BQ	5-P-1023	Left Hand	25	7-A-200	7170-4X	—**BP	5-P-1022	Right Hand	26
645*CB	5-P-1029	Left Hand	25	7-A-140	7170-3X	—**HD	5-P-1189	Right Hand	25
645*CD	5-P-1031	Left Hand	27	7-A-270	7170-4X	—**HE	5-P-1190	Right Hand	27
645*DA	5-P-1037	Spur	23	———	——	—**DA	5-P-1037	Spur	23
645*DU	5-P-1050	Left Hand	28	7-A-240	7170-4X	—**HH	5-P-1193	Right Hand	28
645*ED	5-P-1056	Left Hand	34	7-A-240	7170-4X	—**HK	5-P-1195	Right Hand	34
645*ES	5-P-1059	Left Hand	22	7-A-062	——	—**HL	5-P-1196	Right Hand	22
645*EV	5-P-1060	Spur	40	7-A-300	7170-4X	—**EV	5-P-1060	Spur	40
645*EW	5-P-1061	Left Hand	20	7-A-125	7170-3X	—**HM	5-P-1197	Right Hand	20
645*FC	5-P-1064	Left Hand	26	7-A-165	7170-3X	—**HP	5-P-1199	Right Hand	26
645*FN	5-P-1070	Left Hand	26	7-A-300	7170-4X	—**HR	5-P-1201	Right Hand	26
645*GR	5-P-1157	Spur	23	7-A-062	——	—**GR	5-P-1157	Spur	23
645*HY	5-P-1237	Left Hand	26	7-A-125	7170-1X	—**JB	5-P-1244	Right Hand	26
645*IT	KIT ADAPTER								
645DJA	5-P-1243	Left Hand	27	7-A-165	7170-3X	—**JC	5-P-1247	Right Hand	27
645*JD	5-P-1248	Left Hand	20	7-A-200	7170-3X	—**JE	5-P-1249	Right Hand	20
645*JK	5-P-1261	Left Hand	24	7-A-187	7170-3X	—**JL	5-P-1262	Right Hand	24
645*JM	5-P-1263	Left Hand	22	7-A-125	7170-3X	—**JN	5-P-1264	Right Hand	22
645*JP	5-P-1268	Left Hand	33	7-A-187	7170-3X	—**JQ	5-P-1269	Right Hand	33
645*JS	5-P-1310	Left Hand	20	7-A-062		—**JY	5-P-1312	Right Hand	20
645*JU	5-P-1316	Left Hand	25	7-A-200	7170-4X	—**KA	5-P-1318	Right Hand	25
645*JW	5-P-1319	Left Hand	23	7-A-093	7170-3X	—**KB	5-P-1321	Right Hand	23
645*KJ	5-P-1405	Left Hand	33	——	7170-1X	—**KK	5-P-1406	Right Hand	33
645*KL	5-P-1407	Left Hand	29	7-A-200	7170-4X	—**KM	5-P-1408	Right Hand	29
645*KN	5-P-1383	Left Hand	27	7-A-270	7170-4X	—**KP	5-P-1384	Right Hand	27

626 X AH X – 3 AH

Basic Model
- **626**
- **628**
- **630**
- **645**

Mounting Type & Stud Kit
- **D** = Standard Mount w/Dowel Pin and Metric Stud Kit (626, 630, & 645 Only)
- **G** = Standard Mount & Metric Stud Kit
- **K** = Standard Mount & No Stud Kit
- **X** = Standard Mount & Stud Kit
- **Z** = Deep Mount

Adapter Gear Designator
(See Gear Charts)

PTO Pitch Designator
(See Gear Charts)

Assembly Arrangement
- **3** = Gear Forward, Right Side
- **4** = Gear Forward, Left Side

Pressure Lube
- **P** = Pressure Lube
- **X** = No Pressure Lube

P.T.O. Housing Dimensions

626 Series

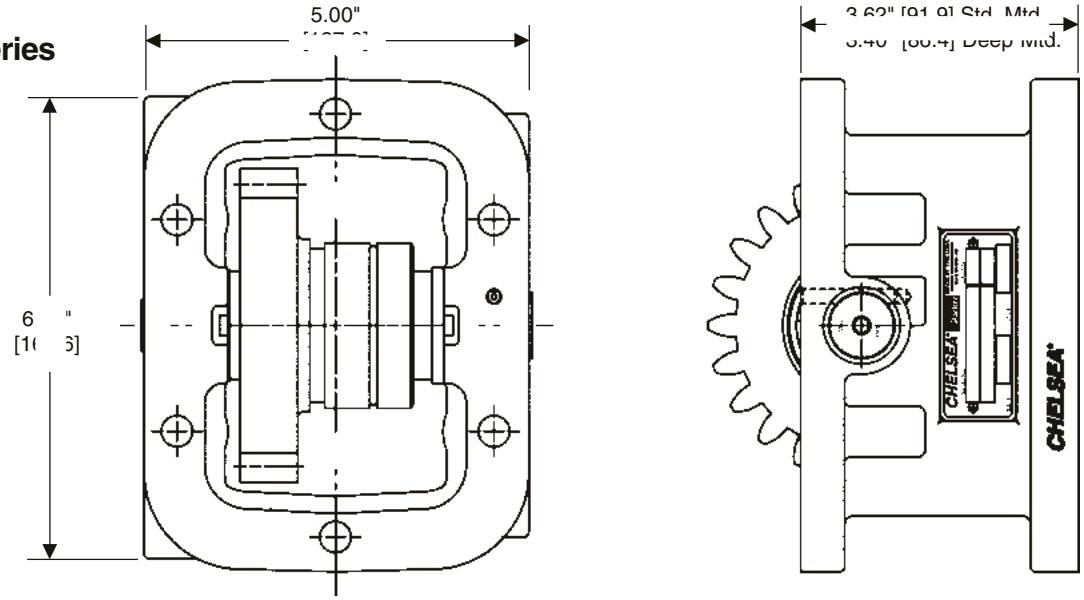

628 Series

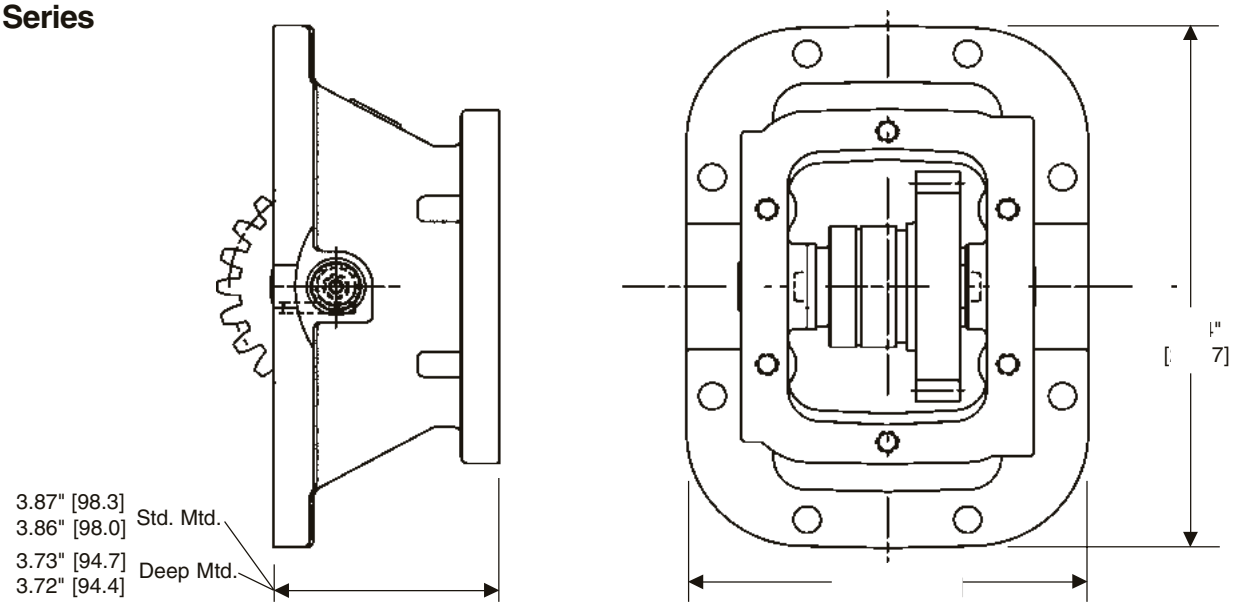

630 Series

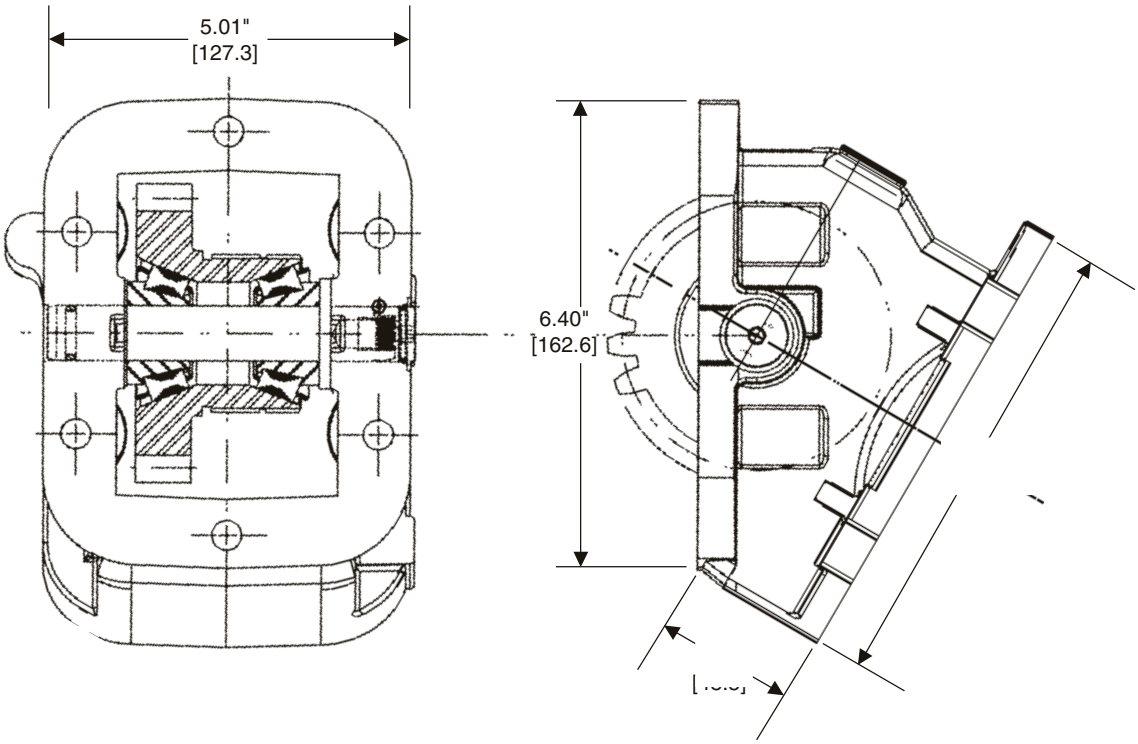

645 Series

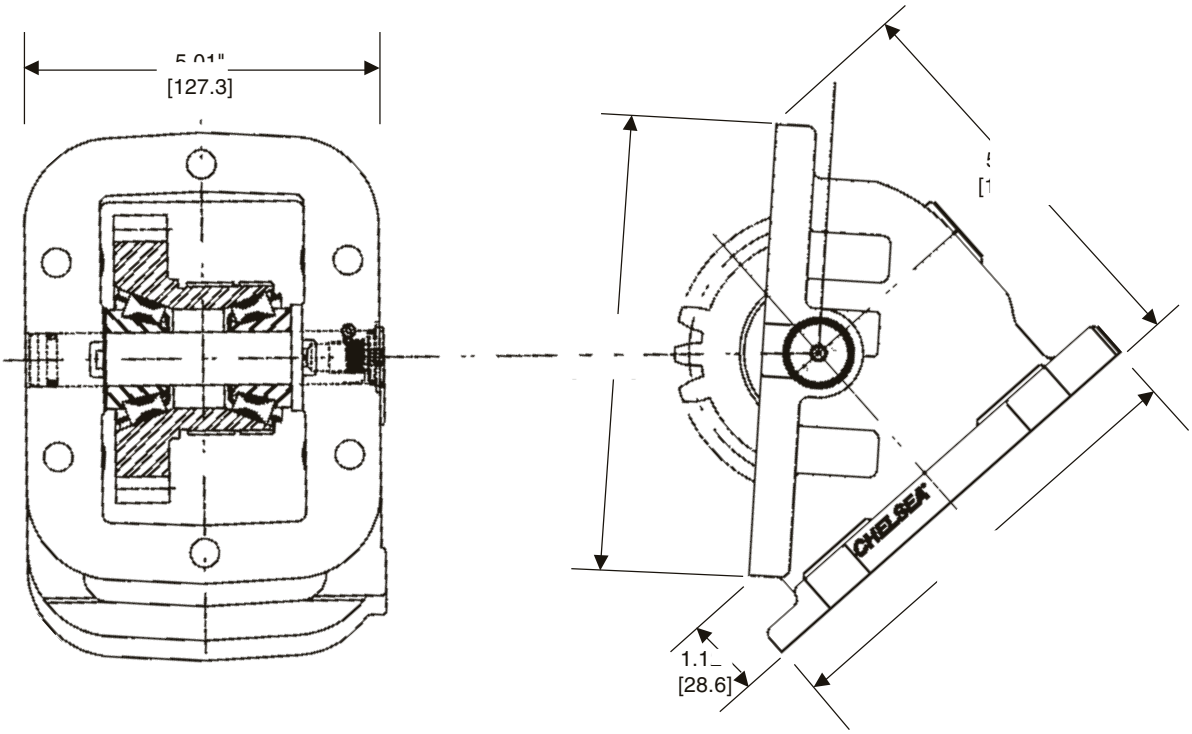

Offer of Sale

The items described in this document and other documents or descriptions provided by Parker Hannifin Corporation, its subsidiaries and its authorized distributors are hereby offered for sale at prices to be established by Parker Hannifin Corporation, its subsidiaries and its authorized distributors. This offer and its acceptance by any customer ("Buyer") shall be governed by all of the following Terms and Conditions. Buyer's order for any such items, when communicated to Parker Hannifin Corporation, its subsidiary or an authorized distributor ("Seller") verbally or in writing, shall constitute acceptance of this offer.

1. Terms and Conditions of Sale: All descriptions, quotations, proposals, offers, acknowledgments, acceptances and sales of Seller's products are subject to and shall be governed exclusively by the terms and conditions stated herein. Buyer's acceptance of any offer to sell is limited to these terms and conditions. Any terms or conditions in addition to, or inconsistent with those stated herein, proposed by Buyer in any acceptance of an offer by Seller, are hereby objected to. No such additional, different or inconsistent terms and conditions shall become part of the contract between Buyer and Seller unless expressly accepted in writing by Seller. Seller's acceptance of any offer to purchase by Buyer is expressly conditional upon Buyer's assent to all the terms and conditions stated herein, including any terms in addition to, or inconsistent with those contained in Buyer's offer, Acceptance of Seller's products shall in all events constitute such assent.

2. Payment: Payment shall be made by Buyer net 30 days from the date of delivery of the items purchased hereunder. Amounts not timely paid shall bear interest at the maximum rate permitted by law for each month or portion thereof that the Buyer is late in making payment. Any claims by Buyer for omissions or shortages in a shipment shall be waived unless Seller receives notice thereof within 30 days after Buyer's receipt of the shipment.

3. Delivery: Unless otherwise provided on the face hereof, delivery shall be made F.O.B. Seller's plant. Regardless of the method of delivery, however, risk of loss shall pass to Buyer upon Seller's delivery to a carrier. Any delivery dates shown are approximate only and Seller shall have no liability for any delays in delivery.

4. Warranty: Seller warrants that the items sold hereunder shall be free from defects in material or workmanship for a period of:

(A) All Power Take-Off units one (1) year from date of installation.

(B) Except 267, 277, 278, 242, 244, 246, 250, 251 and 859 series two (2) years from date of installation. **THIS WARRANTY COMPRISES THE SOLE AND ENTIRE WARRANTY PERTAINING TO ITEMS PROVIDED HEREUNDER. SELLER MAKES NO OTHER WARRANTY, GUARANTEE, OR REPRESENTATION OF ANY KIND WHATSOEVER. ALL OTHER WARRANTIES, INCLUDING BUT NOT LIMITED TO, MERCHANTABILITY AND FITNESS FOR PURPOSE, WHETHER EXPRESS, IMPLIED, OR ARISING BY OPERATION OF LAW, TRADE USAGE, OR COURSE OF DEALING ARE HEREBY DISCLAIMED. NOTWITHSTANDING THE FOREGOING, THERE ARE NO WARRANTIES WHATSOEVER ON ITEMS BUILT OR ACQUIRED WHOLLY OR PARTIALLY, TO BUYER'S DESIGNS OR SPECIFICATIONS.**

5. Limitation Of Remedy: SELLER'S LIABILITY ARISING FROM OR IN ANY WAY CONNECTED WITH THE ITEMS SOLD OR THIS CONTRACT SHALL BE LIMITED EXCLUSIVELY TO REPAIR OR REPLACEMENT OF THE ITEMS SOLD OR REFUND OF THE PURCHASE PRICE PAID BY BUYER, AT SELLER'S SOLE OPTION. IN NO EVENT SHALL SELLER BE LIABLE FOR ANY INCIDENTAL, CONSEQUENTIAL OR SPECIAL DAMAGES OF ANY KIND OR NATURE WHATSOEVER, INCLUDING BUT NOT LIMITED TO LOST PROFITS ARISING FROM OR IN ANY WAY CONNECTED WITH THIS AGREEMENT OR ITEMS SOLD HEREUNDER, WHETHER ALLEGED TO ARISE FROM BREACH OF CONTRACT, EXPRESS OR IMPLIED WARRANTY, OR IN TORT, INCLUDING WITHOUT LIMITATION, NEGLIGENCE, FAILURE TO WARN OR STRICT LIABILITY.

6. Changes, Reschedules and Cancellations: Buyer may request to modify the designs or specifications for the items sold hereunder as well as the quantities and delivery dates thereof, or may request to cancel all or part of this order, however, no such requested modification or cancellation shall become part of the contract between Buyer and Seller unless accepted by Seller in a written amendment to this Agreement. Acceptance of any such requested modification or cancellation shall be at Seller's discretion, and shall be upon such terms and conditions as Seller may require.

7. Special Tooling: A tooling charge may be imposed for any special tooling, including without limitation, dies, fixtures, molds and patterns, acquired to manufacture items sold pursuant to this contract. Such special tooling shall be and remain Seller's property notwithstanding payment of any charges by Buyer. In no event will Buyer acquire any interest in apparatus belonging to Seller which is utilized in the manufacture of the items sold hereunder, even if such apparatus has been specially converted or adapted for such manufacture and notwithstanding any charges paid by Buyer. Unless otherwise agreed, Seller shall have the right to alter, discard or otherwise dispose of any special tooling or other property in its sole discretion at any time.

8. Buyer's Property: Any designs, tools, patterns, materials, drawings, confidential information or equipment furnished by Buyer or any other items which become Buyer's property, may be considered obsolete and may be destroyed by Seller after two (2) consecutive years have elapsed without Buyer placing an order for the items which are manufactured using such property, Seller shall not be responsible for any loss or damage to such property while it is in Seller's possession or control.

9. Taxes: Unless otherwise indicated on the face hereof, all prices and charges are exclusive of excise, sales, use, property, occupational or like taxes which may be imposed by any taxing authority upon the manufacture, sale or delivery of the items sold hereunder. If any such taxes must be paid by Seller or if Seller is liable for the collection of such tax, the amount thereof shall be in addition to the amounts for the items sold. Buyer agrees to pay all such taxes or to reimburse Seller therefore upon receipt of its invoice. If Buyer claims exemption from any sales, use or other tax imposed by any taxing authority, Buyer shall save Seller harmless from and against any such tax, together with any interest or penalties thereon which may be assessed if the items are held to be taxable.

10. Indemnity For Infringement of Intellectual Property Rights: Seller shall have no liability for infringement of any patents, trademarks, copyrights, trade dress, trade secrets or similar rights except as provided in this Part 10. Seller will defend and indemnify Buyer against allegations of infringement of U.S. Patents, U.S. Trademarks, copyrights, trade dress and trade secrets (hereinafter 'Intellectual Property Rights'). Seller will defend at its expense and will pay the cost of any settlement or damages awarded in an action brought against Buyer based on an allegation that an item sold pursuant to this contract infringes the Intellectual Property Rights of a third party. Seller's obligation to defend and indemnify Buyer is contingent on Buyer notifying Seller within ten (10) days after Buyer becomes aware of such allegations of infringement, and Seller having sole control over the defense of any allegations or actions including all negotiations for settlement or compromise. If an item sold hereunder is subject to a claim that it infringes the Intellectual Property Rights of a third party, Seller may, at its sole expense and option, procure for Buyer the right to continue using said item, replace or modify said item so as to make it noninfringing, or offer to accept return of said item and return the purchase price less a reasonable allowance for depreciation. Notwithstanding the foregoing, Seller shall have no liability for claims of infringement based on information provided by Buyer, or directed to items delivered hereunder for which the designs are specified in whole or part by Buyer, or infringements resulting from the modification, combination or use in a system of any item sold hereunder. The foregoing provisions of this Part 10 shall constitute Seller's sole and exclusive liability and Buyer's sole and exclusive remedy for infringement of Intellectual Property Rights.

If a claim is based on information provided by Buyer or if the design for an item delivered hereunder is specified in whole or in part by Buyer, Buyer shall defend and indemnify Seller for all costs, expenses or judgments resulting from any claim that such item infringes any patent, trademark, copyright, trade dress, trade secret or any similar right.

11. Force Majeure: Seller does not assume the risk of and shall not be liable for delay or failure to perform any of Seller's obligations by reason of circumstances beyond the reasonable control of Seller (hereinafter 'Events of Force Majeure'). Events of Force Majeure shall include without limitation, accidents, acts of God, strikes or labor disputes, acts, laws, rules or regulations of any government or government agency, fires, floods, delays or failures in delivery of carriers or suppliers, shortages of materials and any other cause beyond Seller's control.

12. Entire Agreement/Governing Law: The terms and conditions set forth herein, together with any amendments, modifications and any different terms or conditions expressly accepted by Seller in writing, shall constitute the entire Agreement concerning the items sold, and there are no oral or other representations or agreements which pertain there/to. This Agreement shall be governed in all respects by the law of the State of Ohio. No actions arising out of the sale of the items sold hereunder or this Agreement may be brought by either party more than two (2) years after the cause of action accrues.

1/06-P

Parker Hannifin Corporation
Chelsea Products Division
8225 Hacks Cross Road
Olive Branch, Mississippi 38654 USA
Tel: (662) 895-1011
Fax: (662) 895-1019
www.parker.com/chelsea

TG 08/06

Pro Gear and Transmission, Inc. | 906 West Gore St, Orlando, FL 32805
+1 (877) 776-4600 | +1 (407) 872-1901
www.progearandtransmission.com | www.pgttruckparts.com | parts@eprogear.com