Chelsea PTO CAT-H Parts Manual

Pro Gear and Transmission presents Chelsea CAT-H Series PTO parts manual to assist in identifying the parts for your Chelsea Power Take Off unit.

If you need any assistance identifying the correct Power Take Off unit for your truck and equipment, contact your Chelsea replacement part specialists at Pro Gear and Transmission.

Pro Gear stocks every part for your Parker Chelsea PTO including: PTO housings, mounts, driveshafts, gears, bearings, gaskets, cable shift cover assembly, post and plate assembly, brackets, stud kits, seal kits, lever control assembly, air shift cover assembly, direct mount pump conversion kits, stud kits including English and metric references, CAT D&H parts and much more.

Pro Gear Transmission has same day shipping and 1000's of products in stock and ready to ship internationally for your next project.

For parts or service contact the Chelsea specialists at Pro Gear & Transmission, Inc.

1 (877) 776-4600
(407) 872-1901
parts@eprogear.com

Check Inventory | Email Us | Call Us

CHELSEA®

Bulletin HY25-2CAT-M1/US

Parts List
CAT-D & H Series

Effective: January 15, 2007
Supersedes: CAT-D Series Dated July 15, 2006

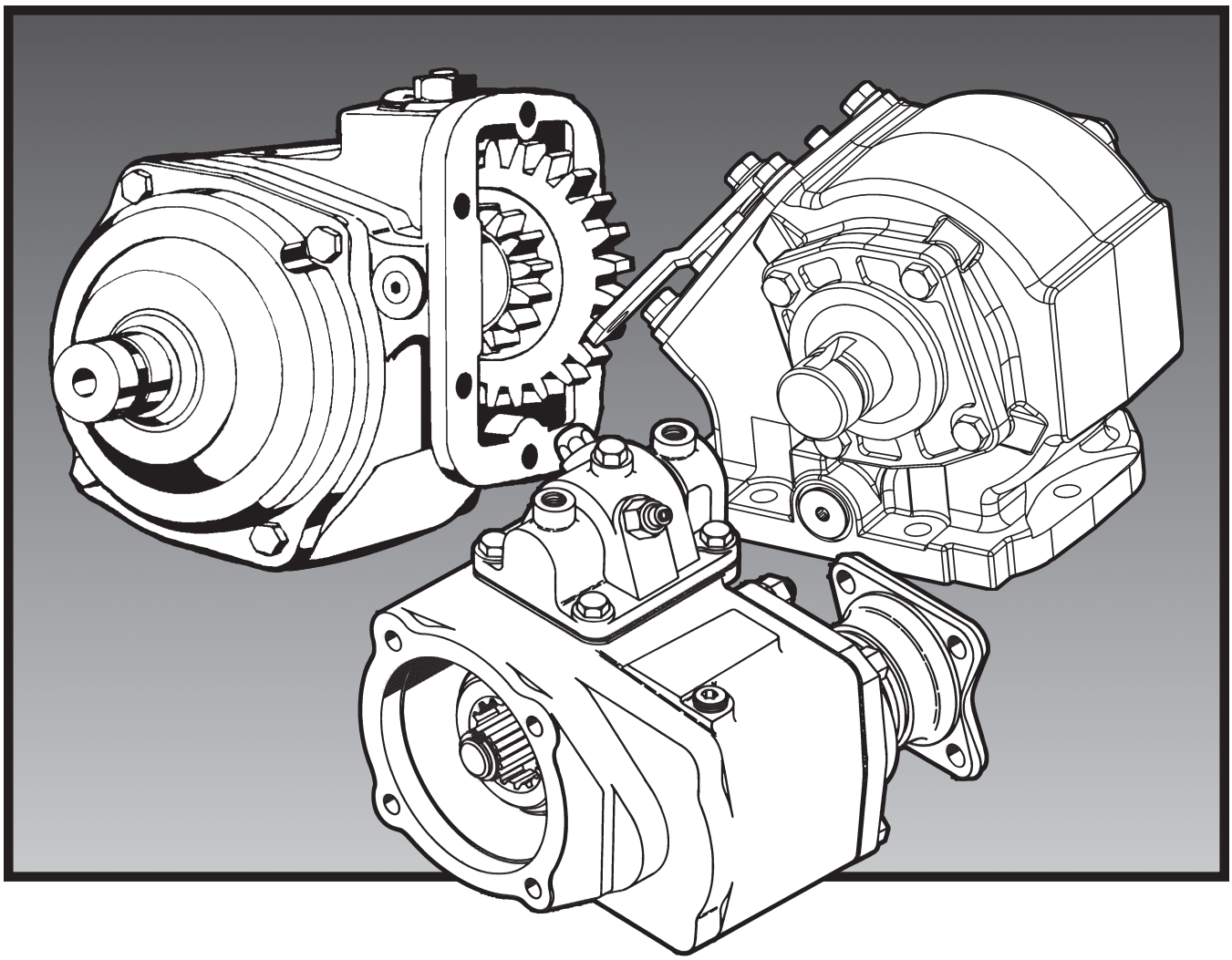

Parker

Pro Gear and Transmission, Inc. | 906 West Gore St, Orlando, FL 32805
+1 (877) 776-4600 | +1 (407) 872-1901
www.progearandtransmission.com | www.pgttruckparts.com | parts@eprogear.com

⚠ WARNING

FAILURE OR IMPROPER SELECTION OR IMPROPER USE OF THE PRODUCTS AND/OR SYSTEMS DESCRIBED HEREIN OR RELATED ITEMS CAN CAUSE DEATH, PERSONAL INJURY AND PROPERTY DAMAGE.

This document and other information from Parker Hannifin Corporation, its subsidiaries and authorized distributors provide product and/or system options for further investigation by users having technical expertise. It is important that you analyze all aspects of your application and review the information concerning the product or system in the current product catalog. Due to the variety of operating conditions and applications for these products or systems, the user, through its own analysis and testing, is solely responsible for making the final selection of the products and systems and assuring that all performance, safety and warning requirements of the application are met.

The products described herein, including without limitation, product features, specifications, designs, availability and pricing, are subject to change by Parker Hannifin Corporation and its subsidiaries at any time without notice.

Offer of Sale

The items described in this document are hereby offered for sale by Parker Hannifin Corporation, its subsidiaries or its authorized distributors. This offer and its acceptance are governed by the provisions stated in the "Offer of Sale".

© Copyright 2006, Parker Hannifin Corporation, All Rights Reserved

CAT-D Series

"AF" Output 1
"AZ" Output 1
"XK" Output 2
"XS" Output 2
"XV" Output 3
"XY" Output 3
Model Number Designation 4

CAT-H Series

Exploded View 5
Bill of Materials 6-7
Installation Drawing SK-424 8
Offer of Sale 12

"AF" Output

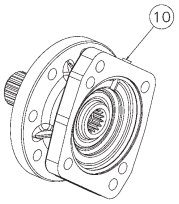

Item	Part Number	Description	Quantity
1	**1-P-614**	Housing - S.A.E. "B"	1
2	**3-P-987-2**	Shaft - Input/Output	1
* 3	**28-P-219**	Shaft Seal	1
** 4	**28-P-259**	O-Ring (In Kit)	1
5	**37-P-61**	Spring (Shipped Loose)	1
6	**68-P-2**	Name Plate	1
7	**380000**	Snap Ring	1
8	**380002**	Name Plate Tape	1
** 10	**379231**	Plug 1/8" NPT	1
	7170-120X	Hardware Kit	1
	328948-28X	Installation Kit	1
*	**379688**	Spline Lube Package	1

Note: * Not required for Wet Spline
** Wet Spline Only

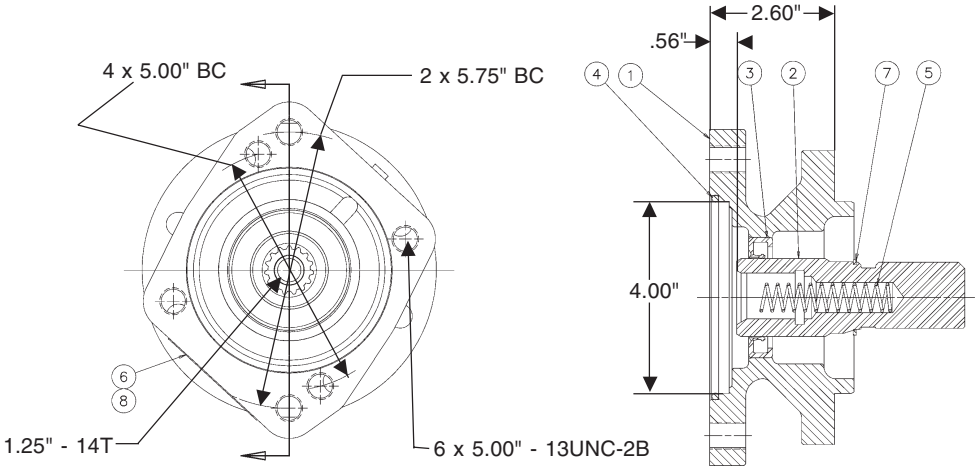

"AZ" Output

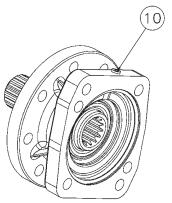

Item	Part Number	Description	Quantity
1	**1-P-614**	Housing - S.A.E. "B"	1
2	**3-P-987-3**	Shaft - Input/Output	1
* 3	**28-P-212**	Shaft Seal	1
** 4	**28-P-259**	O-Ring (In Kit)	1
5	**37-P-61**	Spring	1
6	**68-P-2**	Name Plate	1
7	**380000**	Snap Ring	1
8	**380002**	Name Plate Tape	1
** 10	**379231**	Plug 1/8" NPT	1
	7170-120X	Hardware Kit	1
	328948-28X	Installation Kit	1
*	**379688**	Spline Lube Package	1

Note: * Not required for Wet Spline
** Wet Spline Only

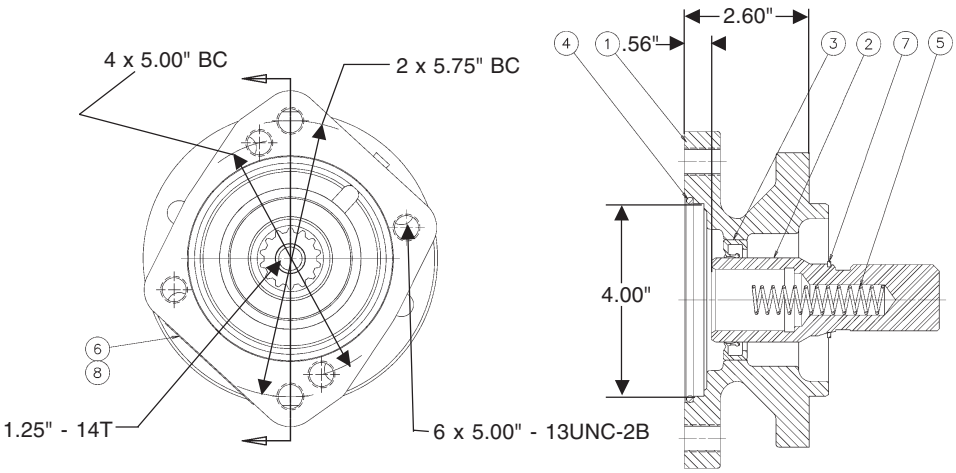

"XK" Output

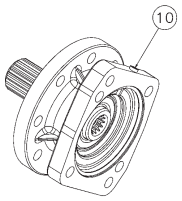

Item	Part Number	Description	Quantity
1	**1-P-614**	Housing - S.A.E. "B"	1
2	**3-P-987-1**	Shaft - Input/Output	1
* 3	**28-P-214**	Shaft Seal	1
** 4	**28-P-259**	O-Ring (In Kit)	1
5	**37-P-61**	Sprint (Shipped Loose)	1
6	**68-P-2**	Name Plate	1
7	**380000**	Snap Ring	1
8	**380002**	Name Plate Tape	1
** 10	**379231**	Plug 1/8" NPT	1
	7170-120X	Hardware Kit	1
	328948-28X	Installation Kit	1
	379688	Spline Lube Package	1

Note: * Not required for Wet Spline
** Wet Spline Only

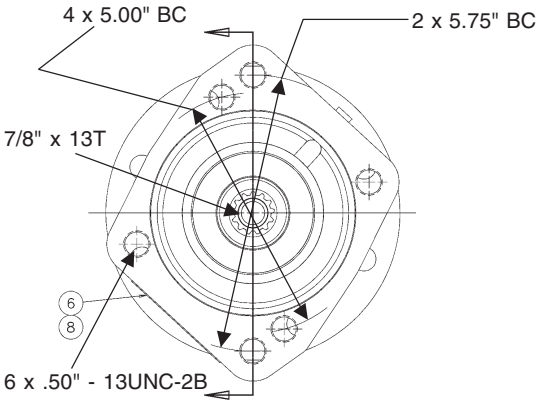

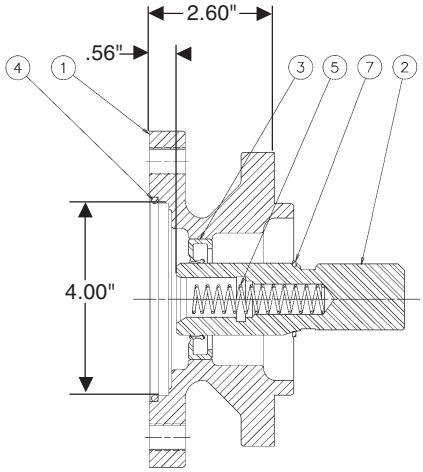

"XS" Output

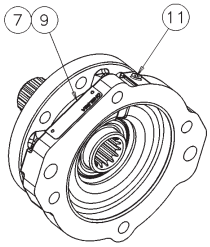

Item	Part Number	Description	Quantity
1	**1-P-618**	Housing - S.A.E. "C"	1
2	**3-P-987-3**	Shaft - Input/Output	1
3	**23-P-69**	Spacer	1
* 4	**28-P-212**	Shaft Seal	1
** 5	**28-P-245**	O-Ring (In Kit)	1
6	**37-P-61**	Spring (Shipped Loose)	1
7	**68-P-2**	Name Plate	1
8	**380000**	Snap Ring	1
9	**380002**	Name Plate Tape	1
** 11	**379231**	Plug 1/8" NPT	1
	7170-120X	Hardware Kit	1
	328948-28X	Installation Kit	1
*	**379688**	Spline Lube Package	1

Note: * Not required for Wet Spline
** Wet Spline Only

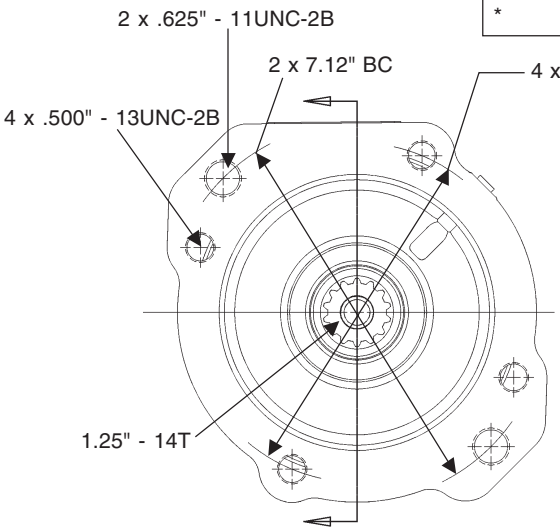

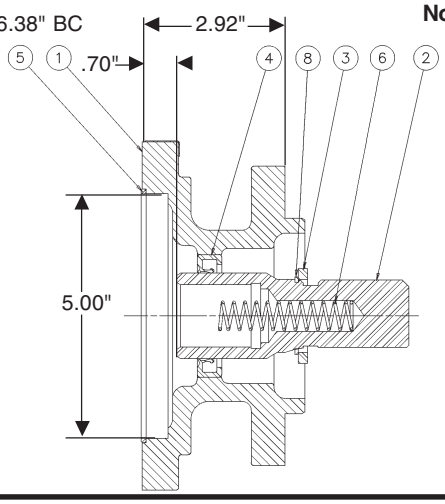

"XV" Output

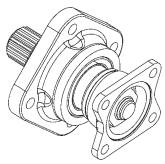

Item	Part Number	Description	Quantity
1	**1-P-612**	Housing - Drive Shaft Output	1
2	**3-P-986**	Shaft - Input/Output	1
3	**28-P-283**	Shaft Seal	1
4	**68-P-2**	Name Plat	1
5	**378832**	Nut	1
6	**378836**	Snap Ring	1
7	**379052**	Snap Ring	1
8	**380002**	Name Plate Tape	1
9	**561020**	Ball Bearing	1
10	**3-1-3431**	Companion Flange (1410 Series)	1
	7170-119X	Hardware Kit	1
	328948-28X	Installation Kit	1

Note: * Not required for Wet Spline
** Wet Spline Only

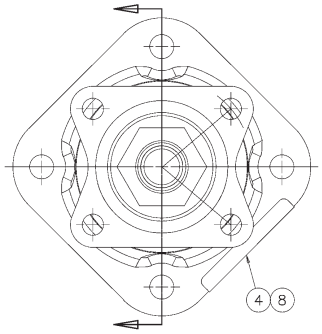

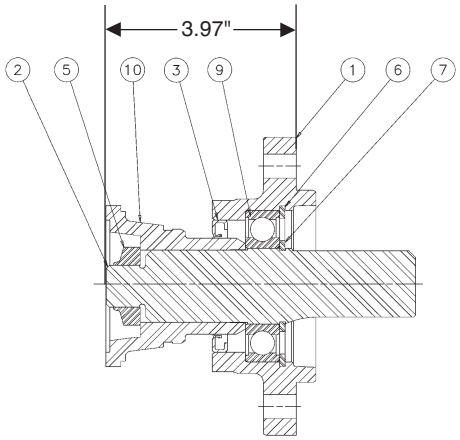

"XY" Output

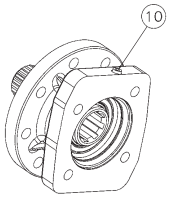

Item	Part Number	Description	Quantity
1	**1-P-616**	Housing - DIN	1
2	**3-P-988**	Shaft - Input/Output	1
** 3	**28-P-252**	O-Ring (In Kit)	1
* 4	**28-P-275**	Shaft Seal	1
5	**37-P-61**	Spring (Shipped Loose)	1
6	**68-P-2**	Name Plate	1
7	**380000**	Snap Ring	1
8	**380002**	Name Plate Tape	1
** 10	**379231**	Plug 1/8" NPT	1
	7170-120X	Hardware Kit	1
	328948-28X	Installation Kit	1
*	**379688**	Spline Lube Package	1

Note: * Not required for Wet Spline
** Wet Spline Only

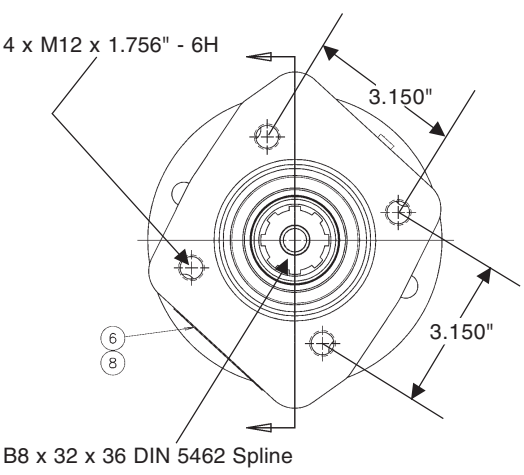

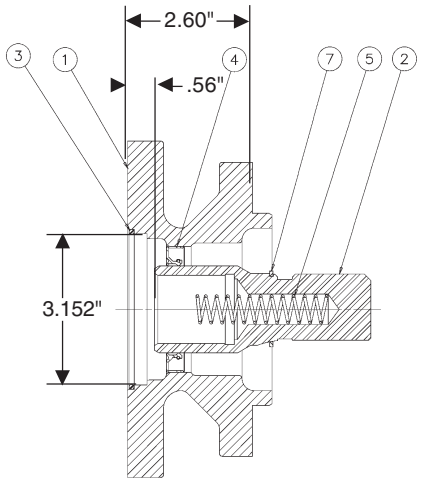

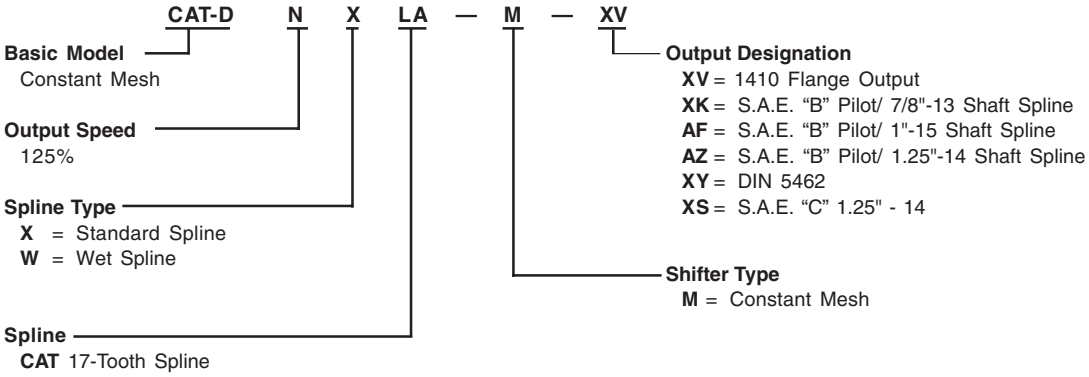
CAT-D N X LA — M — XV
Basic Model
Constant Mesh
Output Speed
125%
Spline Type
X = Standard Spline
W = Wet Spline
Spline
CAT 17-Tooth Spline
Shifter Type
M = Constant Mesh
Output Designation
XV = 1410 Flange Output
XK = S.A.E. “B” Pilot/ 7/8"-13 Shaft Spline
AF = S.A.E. “B” Pilot/ 1"-15 Shaft Spline
AZ = S.A.E. “B” Pilot/ 1.25"-14 Shaft Spline
XY = DIN 5462
XS = S.A.E. “C” 1.25" - 14

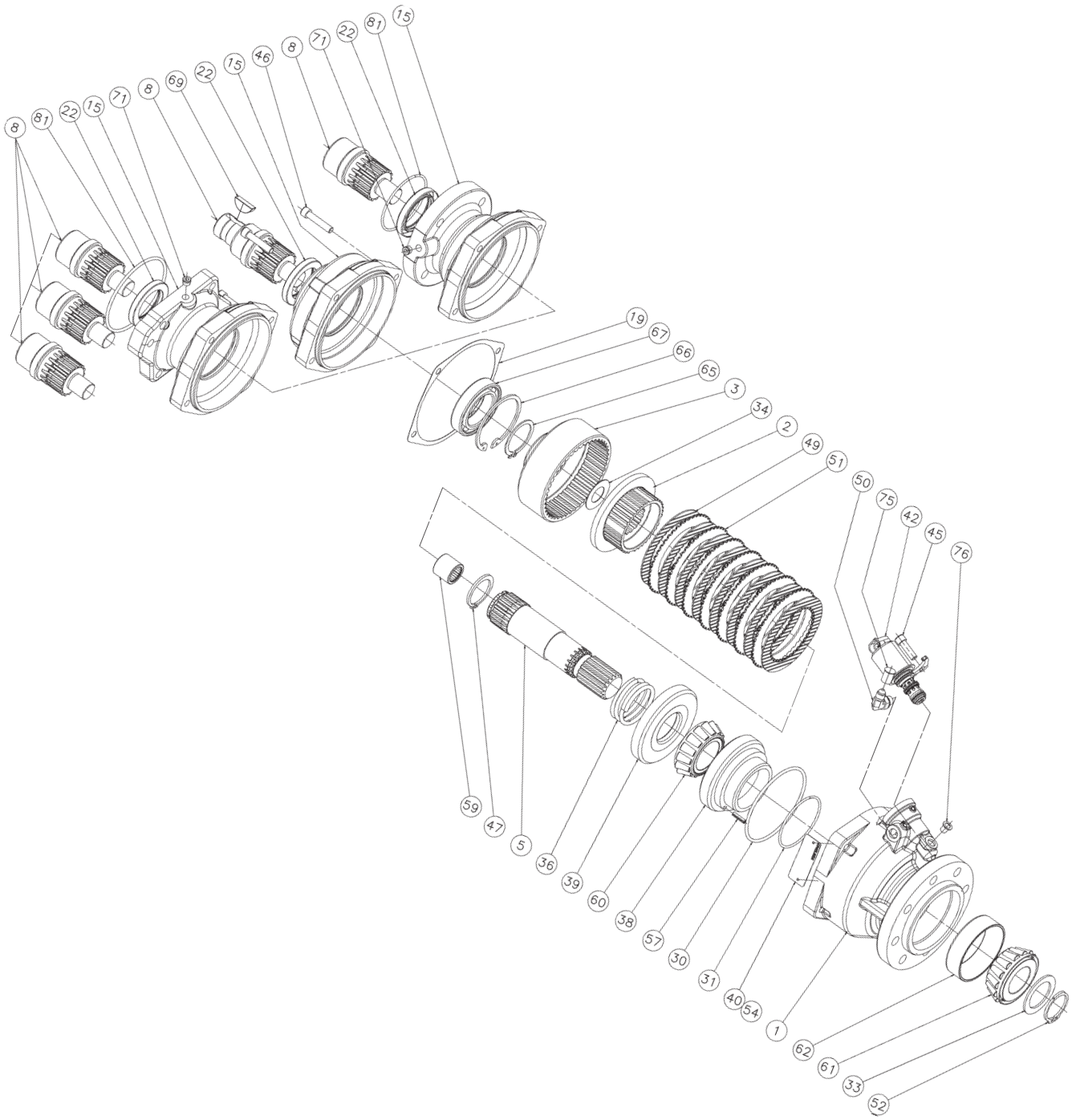
15
81
22
71
8
46
15
22
69
8
71
22
81
15
8
19
67
66
65
3
34
2
49
51
50
75
42
45
76
59
47
5
36
39
60
38
57
30
31
40
54
1
62
61
33
52

Item	Part Number	Description	Quantity
1	**1-P-620**	PTO Housing (Cat-H)	1
2	**2-P-458**	Clutch Hub	1
3	**2-P-854**	Clutch Bell	1
5	**3-P-990**	Shaft - Input	1
		Shaft - Output	
8	**3-P-991**	Shaft -Output - Keyed (“XD” Output)	1or
	3-P-992	Shaft - Output - Pump (“XK” Output)	1or
	3-P-993	Shaft - Output - Pump (“AF” Output)	1or
	3-P-994	Shaft - Output - Pump (“AZ” Output)	1or
	3-P-995	Shaft - Output - Pump (“XY” Output)	1
		Output Flange	
15	**21-P-694**	Bearing Cap (“XD” Output)	1or
	21-P-693	Pump Flange - SAE “B” (“AK” “AF” “AZ” Output)	1or
	21-P-696	Pump Flange - DIN 5462 (“XY” Output)	1
19	**22-P-101**	Gasket	1
		Oil Seal - Output	
22	**28-P-212**	Oil Seal (“XD” “XK” “AF” “AZ” Output)	1or
	28-P-275	Oil Seal (“XY” Output)	1
30	**28-P-259**	O-Ring	1
31	**28-P-284**	O-Ring	1
33	**31-P-70**	Thrust Washer	1
34	**31-P-114**	Thrust Washer	1
36	**37-P-39**	Spring	1
38	**66-P-25**	Piston	1
39	**66-P-26**	Pressure Plate	1
40	**68-P-2**	Name Plate	1
42	**379993-12**	Valve - 12 volt (Includes Clamp)	1or
	379993-24	Valve - 24 volt (Includes Clamp)	1
45	**378447-6**	Capscrew Soc. Hd. .312"-18 X 1.000"	1
46	**378447-8**	Capscrew Soc. Hd. .312"-18 X 1.500"	4
47	**379052**	Snapring	1
49	**379485**	Friction Plate	8
50	**379486**	Elbow	1
51	**379595**	Reaction Plate	7
52	**379746**	Snapring	1
54	**380002**	Nameplate Tape	1
N.S.	**380008**	Plug - Expander	2
57	**500597-10**	Roll Pin .188" X .750"	1
59	**561021**	Needle Roller	1
60	**561022**	Tapered Roller Bearing	1
61	**561023**	Tapered Roller Bearing	1
62	**561024**	Bearing Race	1

N.S. — Not Shown A.R. — As Required

Item	Part Number	Description	Quantity
65	**379668**	Snap Ring - EXT.	1
66	**379919**	Snap Ring - INT.	1
67	**561018**	Ball Bearing	1
69	**500007-29**	Key (Output Shaft) (“XD” Output)	1
71	**379231**	Plug, 1/8" NPT (Wet Spline Only) (“XK” “AF” “AZ” Output)	2
75	**379564-2**	Plug - Shipping	1
76	**500897-3**	Plug - Shipping	1
		Loose Parts	
81	**28-P-259**	O-Ring (Wet Spline Only) (“XK” “AF” “AZ” Output)	1or
	28-P-252	O-Ring (Wet Spline Only) (“XY” Output)	1
	7170-120X	Hardware Kit	1
	328948-29X	Installation kit (Hot Shift)	1
	329443-12X	Installation kit 12-V	1or
	329443-24X	Installation kit 24-V	1
	379688	Spline Lube Package (Non-wet Spline Only)	1

N.S. — Not Shown A.R. — As Required

Model Number Designation

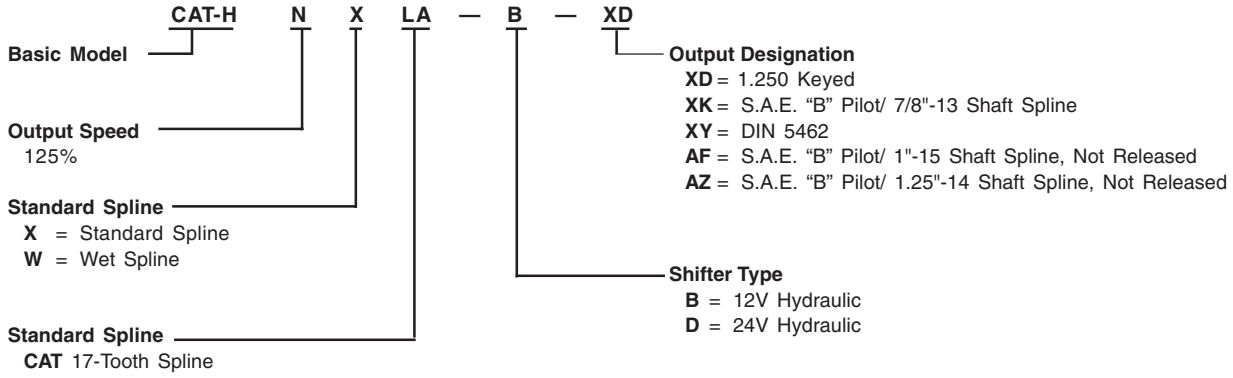

12v Electrical & Hydraulic Installation CAT-H (SK-424 Rev A)

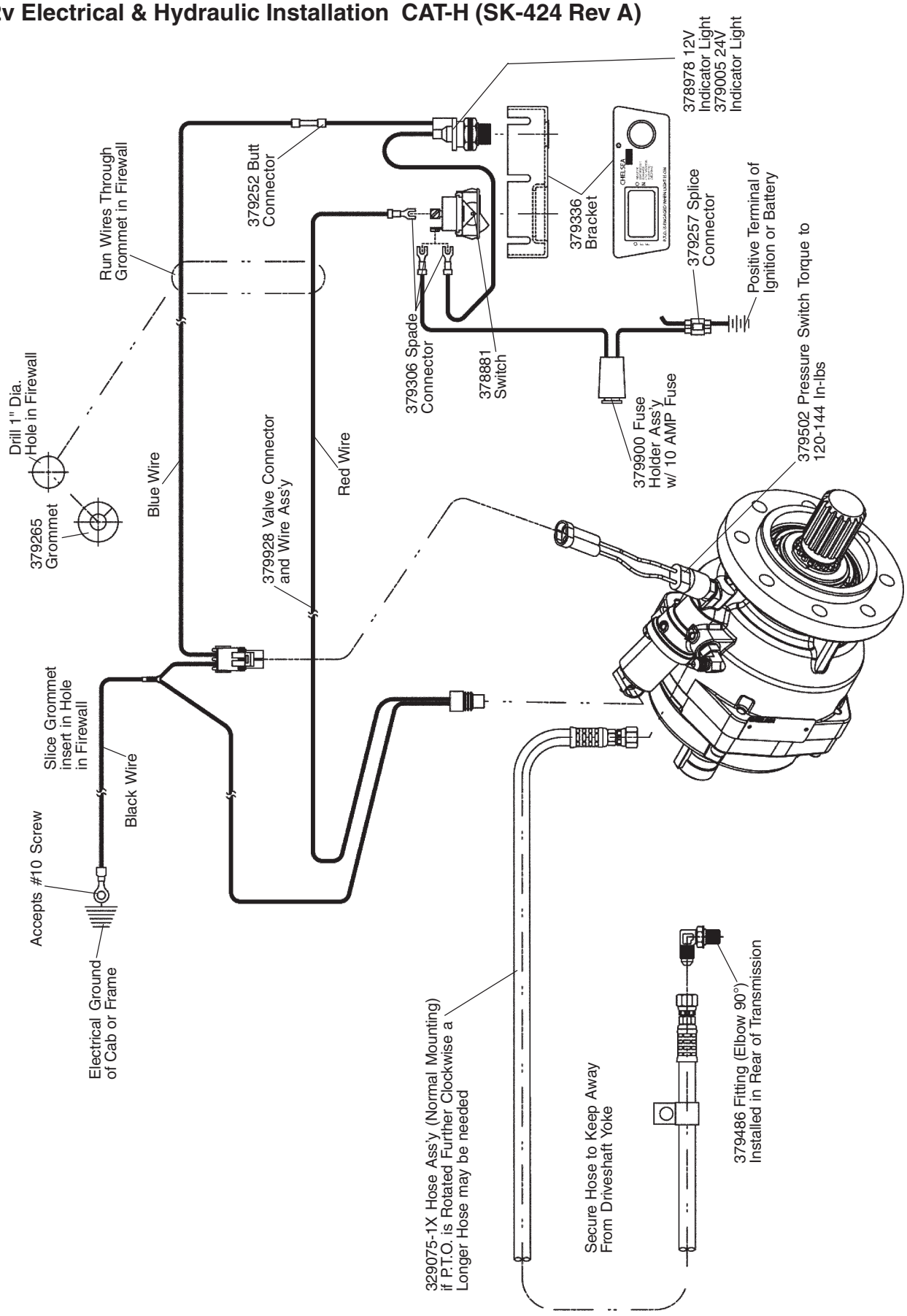

Notes

Parker CHELSEA®
Pro Gear and Transmission, Inc. | 906 West Gore St, Orlando, FL 32805
+1 (877) 776-4600 | +1 (407) 872-1901
www.progearandtransmission.com | www.pgttruckparts.com | parts@eprogear.com
Parker Hannifin Corporation
Chelsea Products Division
Olive Branch, MS 38654 USA

Notes

Pro Gear and Transmission, Inc. | 906 West Gore St, Orlando, FL 32805
+1 (877) 776-4600 | +1 (407) 872-1901
www.progearandtransmission.com | www.pgttruckparts.com | parts@eprogear.com

Parker Hannifin Corporation
Chelsea Products Division
Olive Branch, MS 38654 USA

Notes

Offer of Sale

The items described in this document and other documents or descriptions provided by Parker Hannifin Corporation, its subsidiaries and its authorized distributors are hereby offered for sale at prices to be established by Parker Hannifin Corporation, its subsidiaries and its authorized distributors. This offer and its acceptance by any customer ("Buyer") shall be governed by all of the following Terms and Conditions. Buyer's order for any such items, when communicated to Parker Hannifin Corporation, its subsidiary or an authorized distributor ("Seller") verbally or in writing, shall constitute acceptance of this offer.

1. Terms and Conditions of Sale: All descriptions, quotations, proposals, offers, acknowledgments, acceptances and sales of Seller's products are subject to and shall be governed exclusively by the terms and conditions stated herein. Buyer's acceptance of any offer to sell is limited to these terms and conditions. Any terms or conditions in addition to, or inconsistent with those stated herein, proposed by Buyer in any acceptance of an offer by Seller, are hereby objected to. No such additional, different or inconsistent terms and conditions shall become part of the contract between Buyer and Seller unless expressly accepted in writing by Seller. Seller's acceptance of any offer to purchase by Buyer is expressly conditional upon Buyer's assent to all the terms and conditions stated herein, including any terms in addition to, or inconsistent with those contained in Buyer's offer, Acceptance of Seller's products shall in all events constitute such assent.

2. Payment: Payment shall be made by Buyer net 30 days from the date of delivery of the items purchased hereunder. Amounts not timely paid shall bear interest at the maximum rate permitted by law for each month or portion thereof that the Buyer is late in making payment. Any claims by Buyer for omissions or shortages in a shipment shall be waived unless Seller receives notice thereof within 30 days after Buyer's receipt of the shipment.

3. Delivery: Unless otherwise provided on the face hereof, delivery shall be made F.O.B. Seller's plant. Regardless of the method of delivery, however, risk of loss shall pass to Buyer upon Seller's delivery to a carrier. Any delivery dates shown are approximate only and Seller shall have no liability for any delays in delivery.

4. Warranty: Seller warrants that the items sold hereunder shall be free from defects in material or workmanship for a period of:
(A) All Power Take-Off units one (1) year from date of installation.
(B) Except 267, 277, 278, 242, 244, 246, 250, 251 and 859 series two (2) years from date of installation. **THIS WARRANTY COMPRISES THE SOLE AND ENTIRE WARRANTY PERTAINING TO ITEMS PROVIDED HEREUNDER. SELLER MAKES NO OTHER WARRANTY, GUARANTEE, OR REPRESENTATION OF ANY KIND WHATSOEVER. ALL OTHER WARRANTIES, INCLUDING BUT NOT LIMITED TO, MERCHANTABILITY AND FITNESS FOR PURPOSE, WHETHER EXPRESS, IMPLIED, OR ARISING BY OPERATION OF LAW, TRADE USAGE, OR COURSE OF DEALING ARE HEREBY DISCLAIMED. NOTWITHSTANDING THE FOREGOING, THERE ARE NO WARRANTIES WHATSOEVER ON ITEMS BUILT OR ACQUIRED WHOLLY OR PARTIALLY, TO BUYER'S DESIGNS OR SPECIFICATIONS.**

5. Limitation Of Remedy: SELLER'S LIABILITY ARISING FROM OR IN ANY WAY CONNECTED WITH THE ITEMS SOLD OR THIS CONTRACT SHALL BE LIMITED EXCLUSIVELY TO REPAIR OR REPLACEMENT OF THE ITEMS SOLD OR REFUND OF THE PURCHASE PRICE PAID BY BUYER, AT SELLER'S SOLE OPTION. IN NO EVENT SHALL SELLER BE LIABLE FOR ANY INCIDENTAL, CONSEQUENTIAL OR SPECIAL DAMAGES OF ANY KIND OR NATURE WHATSOEVER, INCLUDING BUT NOT LIMITED TO LOST PROFITS ARISING FROM OR IN ANY WAY CONNECTED WITH THIS AGREEMENT OR ITEMS SOLD HEREUNDER, WHETHER ALLEGED TO ARISE FROM BREACH OF CONTRACT, EXPRESS OR IMPLIED WARRANTY, OR IN TORT, INCLUDING WITHOUT LIMITATION, NEGLIGENCE, FAILURE TO WARN OR STRICT LIABILITY.

6. Changes, Reschedules and Cancellations: Buyer may request to modify the designs or specifications for the items sold hereunder as well as the quantities and delivery dates thereof, or may request to cancel all or part of this order, however, no such requested modification or cancellation shall become part of the contract between Buyer and Seller unless accepted by Seller in a written amendment to this Agreement. Acceptance of any such requested modification or cancellation shall be at Seller's discretion, and shall be upon such terms and conditions as Seller may require.

7. Special Tooling: A tooling charge may be imposed for any special tooling, including without limitation, dies, fixtures, molds and patterns, acquired to manufacture items sold pursuant to this contract. Such special tooling shall be and remain Seller's property notwithstanding payment of any charges by Buyer. In no event will Buyer acquire any interest in apparatus belonging to Seller which is utilized in the manufacture of the items sold hereunder, even if such apparatus has been specially converted or adapted for such manufacture and notwithstanding any charges paid by Buyer. Unless otherwise agreed, Seller shall have the right to alter, discard or otherwise dispose of any special tooling or other property in its sole discretion at any time.

8. Buyer's Property: Any designs, tools, patterns, materials, drawings, confidential information or equipment furnished by Buyer or any other items which become Buyer's property, may be considered obsolete and may be destroyed by Seller after two (2) consecutive years have elapsed without Buyer placing an order for the items which are manufactured using such property, Seller shall not be responsible for any loss or damage to such property while it is in Seller's possession or control.

9. Taxes: Unless otherwise indicated on the face hereof, all prices and charges are exclusive of excise, sales, use, property, occupational or like taxes which may be imposed by any taxing authority upon the manufacture, sale or delivery of the items sold hereunder. If any such taxes must be paid by Seller or if Seller is liable for the collection of such tax, the amount thereof shall be in addition to the amounts for the items sold. Buyer agrees to pay all such taxes or to reimburse Seller therefore upon receipt of its invoice. If Buyer claims exemption from any sales, use or other tax imposed by any taxing authority, Buyer shall save Seller harmless from and against any such tax, together with any interest or penalties thereon which may be assessed if the items are held to be taxable.

10. Indemnity For Infringement of Intellectual Property Rights: Seller shall have no liability for infringement of any patents, trademarks, copyrights, trade dress, trade secrets or similar rights except as provided in this Part 10. Seller will defend and indemnify Buyer against allegations of infringement of U.S. Patents, U.S. Trademarks, copyrights, trade dress and trade secrets (hereinafter 'Intellectual Property Rights'). Seller will defend at its expense and will pay the cost of any settlement or damages awarded in an action brought against Buyer based on an allegation that an item sold pursuant to this contract infringes the Intellectual Property Rights of a third party. Seller's obligation to defend and indemnify Buyer is contingent on Buyer notifying Seller within ten (10) days after Buyer becomes aware of such allegations of infringement, and Seller having sole control over the defense of any allegations or actions including all negotiations for settlement or compromise. If an item sold hereunder is subject to a claim that it infringes the Intellectual Property Rights of a third party, Seller may, at its sole expense and option, procure for Buyer the right to continue using said item, replace or modify said item so as to make it noninfringing, or offer to accept return of said item and return the purchase price less a reasonable allowance for depreciation. Notwithstanding the foregoing, Seller shall have no liability for claims of infringement based on information provided by Buyer, or directed to items delivered hereunder for which the designs are specified in whole or part by Buyer, or infringements resulting from the modification, combination or use in a system of any item sold hereunder. The foregoing provisions of this Part 10 shall constitute Seller's sole and exclusive liability and Buyer's sole and exclusive remedy for infringement of Intellectual Property Rights.
If a claim is based on information provided by Buyer or if the design for an item delivered hereunder is specified in whole or in part by Buyer, Buyer shall defend and indemnify Seller for all costs, expenses or judgments resulting from any claim that such item infringes any patent, trademark, copyright, trade dress, trade secret or any similar right.

11. Force Majeure: Seller does not assume the risk of and shall not be liable for delay or failure to perform any of Seller's obligations by reason of circumstances beyond the reasonable control of Seller (hereinafter 'Events of Force Majeure'). Events of Force Majeure shall include without limitation, accidents, acts of God, strikes or labor disputes, acts, laws, rules or regulations of any government or government agency, fires, floods, delays or failures in delivery of carriers or suppliers, shortages of materials and any other cause beyond Seller's control.

12. Entire Agreement/Governing Law: The terms and conditions set forth herein, together with any amendments, modifications and any different terms or conditions expressly accepted by Seller in writing, shall constitute the entire Agreement concerning the items sold, and there are no oral or other representations or agreements which pertain there/to. This Agreement shall be governed in all respects by the law of the State of Ohio. No actions arising out of the sale of the items sold hereunder or this Agreement may be brought by either party more than two (2) years after the cause of action accrues.

1/06-P